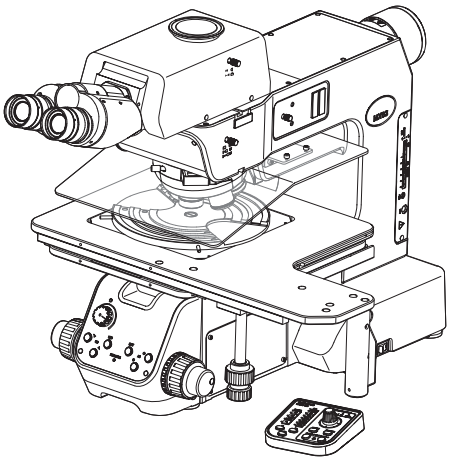

Instructions

MX63/MX63L

Semiconductor/FPD/Industrial Inspection Microscopes

Notes

This instruction manual is for the EVIDENT microscope.
To ensure safety, obtain optimum performance and to familiarize yourself fully with the use of this product, we recommend that you study this manual thoroughly before operating this product, and always keep this manual at hand when operating this product.
Retain this instruction manual in an easily accessible place near the work desk for future reference.
For details of products included in the configuration of this microscope, see page 18.

Optical Microscope and Accessory

This product is applied with the requirements of standard IEC/EN61326-1 concerning electromagnetic compatibility.

- Emission Class A, applied to industrial environment requirements.
- Immunity Applied to industrial environment requirements.

Some interference may occur if this product is used in domestic location.

In accordance with European Directive on Waste Electrical and Electronic Equipment, this symbol indicates that the product must not be disposed of as unsorted municipal waste, but should be collected separately.
Refer to your local EVIDENT distributor in EU for return and/or collection systems available in your country.

NOTE: This product has been tested and found to comply with the limits for a Class A digital device, pursuant to Part 15 of the FCC Rules. These limits are designed to provide reasonable protection against harmful interference when the product is operated in a commercial environment. This product generates, uses, and can radiate radio frequency energy and, if not installed and used in accordance with the instruction manual, may cause harmful interference to radio communications.
Operation of this product in a residential area is likely to cause harmful interference in which case the user will be required to correct the interference at his own expense.

FCC WARNING: Changes or modifications not expressly approved by the party responsible for compliance could void the user's authority to operate the product.

For Korea only

이 기기는 업무용 환경에서 사용할 목적으로 적합성평가를 받은 기기로서
가정용 환경에서 사용하는 경우 전파간섭의 우려가 있습니다.

Contents

Introduction 1

Safety precautions 2

1 Nomenclature of units 13

2 List of combinable units 18

3 Observation procedures 22

3-1 Reflected light brightfield/darkfield observation procedures 22

3-2 Main switch 24

3-3 Selecting the observation method (BF/DF) 25

3-4 Selecting between the eyepiece light path and the camera light path 26

3-5 Placing a sample 27

1 Placing a sample 27

2 Moving the stage 27

3-6 Selecting the objective 28

3-7 Focusing 29

1 Focusing 29

2 Adjusting the tension of the coarse focusing knob 29

3 Attaching/detaching the fine focusing knob 29

4 Using the pre-focusing lever 30

5 Using the focus aid (MX-FA) 31

3-8 Adjusting the brightness 32

1 When the LED lamp housing is combined 32

2 When the mercury lamp housing is combined 32

3 When the halogen lamp housing is combined 32

4 When the light source is combined 33

5 Using the LIM/SET switch 33

3-9 Adjusting the observation tube 35
1 Adjusting the interpupillary distance 35
2 Adjusting the diopter 35
3 Using the eye shades 37
4 Adjusting the tilt 37
3-10 Adjusting the aperture diaphragm 38
3-11 Using the filter for reflected light illumination 39
3-12 Setting the glare prevention 40
3-13 Observation using the mercury burner 41
3-14 Using the oil immersion objective 42
4 Image acquisition 43
4-1 Image acquisition diagram 43
5 Observation methods 44
5-1 Transmitted light brightfield observation procedures 44
1 Notes for observation 46
2 Adjusting the transmitted light illumination 46
3 Using the field diaphragm for transmitted light illumination 47
4 Using the aperture diaphragm for transmitted light illumination 48
5 Using the filters for transmitted light illumination 49
5-2 Reflected light differential interference contrast (DIC) observation procedures 50
1 Setting the analyzer (when using U-MDICAF3) 51
2 Setting the DIC slider 52
3 Adjusting the prism of the DIC slider 53
5-3 Reflected light simple polarization observation procedures 54
5-4 Reflected light fluorescence observation procedures 55
5-5 Reflected light IR (infrared) observation procedures 56

5-6 Reflected light simultaneous observation for BF/DF observation procedures.....57
1 Inserting the MIX slider for reflected light observation.....58
2 Turning ON the illumination of the MIX slider for reflected light observation.....58
3 Adjusting the illumination brightness.....59
4 Selecting the illumination pattern.....60
5-7 Transmitted light simple polarization observation procedures.....61
1 Setting the analyzer and the polarizer for transmitted light illumination.....62
6 Replacement of optical parts.....63
6-1 Removing and attaching the eyepiece.....63
6-2 Replacing the objective.....65
6-3 Replacing the halogen bulb.....68
6-4 Replacing the mercury burner.....70
6-5 Replacing the filter.....75
7 Troubleshooting.....76
8 Specifications.....82
9 Optical performance list «UIS2 series».....84
10 Assembly.....88
10-1 Assembly diagram.....88
10-2 Assembly procedures.....89
1 Attaching the stage.....89
2 Attaching the holders.....90
3 Attaching the objective.....91
4 Attaching the revolving nosepiece.....91
5 Attaching the MIX slider / DIC slider for reflected light observation.....91
6 Attaching the observation tube.....91
7 Attaching the eyepiece.....91
8 Attaching the light source for reflected light illumination.....92
9 Attaching the breath shield MX-BSH-ESD-2.....95
10 Connecting the cables.....96

11 Setting the DIP switch / AS.PRESET switch 98
12 Connecting the power cord 101
13 Use of the adjuster 102
14 Seismic protection 102
15 Centering of the aperture diaphragm of reflected light illumination 103
10-3 Connection with PC 104
1 Connecting the interface cable 104
2 Start procedures /Exit procedures 104
11 Maintenance parts 105
12 Preventive inspection sheet for illumination devices 106
13 Proper selection of the power supply cord 107
Appendix: Units attached by EVIDENT 109
1 Transmitted light illumination unit (MX-TILLA/MX-TILLB) 109
2 Setting the OP light path 110
3 Attaching the reflected light filter (26ND0.5) 111
4 Attaching the focus aid (MX-FA) 112

Introduction

This microscope employs the UIS2 optical systems. If you use an eyepiece, objective or condenser, etc. together with this microscope, be sure to use those of UIS2 optical system series.
Using inappropriate units restricts the performance.
(There are other units usable with the UIS series. Contact EVIDENT or refer to the latest catalogs.)
This instruction manual applies to users of this product and EVIDENT distributors. However, some part at the end of this instruction manual applies to EVIDENT distributors only.

Configuration of instruction manuals

Read all instruction manuals provided with the units you purchased.
The following instruction manuals are prepared for the units to be used with this product.

Manual names	Main contents
Semiconductor / FPD / Industrial Inspection Microscopes (this instruction manual)	Reflected brightfield observation, reflected darkfield observation, reflected differential interference contrast observation, reflected simple polarization observation, reflected fluorescence observation, reflected infrared observation, reflected brightfield/darkfield simultaneous observation, transmitted brightfield observation and transmitted simple polarization observation
U-RFL-T power supply for mercury burner / U-RX-T power supply for xenon burner	Connection of the mercury lamp housing with the power supply
TH4 power supply for halogen bulb	Connection of the halogen lamp housing with the power supply
U-LGPS LED and LDP Light Source	Connection of the light guide illumination system with the liquid light guide, etc.

Label of immersion oil

Read the label of the immersion oil you purchased.

Immersion oil	Main contents
IMMOIL-F30CC	Cautions and handling procedures of the immersion oil

SEMI

This device has been subjected to the compliance evaluations of the following guidelines under the SEMI Standard.

- S2-0715: Safety Guidelines for Semiconductor Manufacturing Equipment
- S8-0915: Safety Guidelines for Ergonomics Engineering of Semiconductor Manufacturing Equipment

Intended use

This product is designed to observe magnified images of samples for industrial applications.
Appropriate samples include semiconductors, electrical components, molded parts or mechanical parts.
Industrial applications include observation, inspection or measurements.
Do not use this product for any purpose other than its intended use.

Safety precautions

If the product is used in a manner not specified by this manual, the safety of the user may be imperiled. In addition, the product may also be damaged.
Read this instruction manual carefully and always use this product according to this instruction manual.

The following symbols are used in this instruction manual.

⚠CAUTION : Indicates a potentially hazardous situation which, if not avoided, may result in minor or moderate injury.

NOTE : Indicates a potentially hazardous situation which, if not avoided, may result in damage to the equipment or other property.

TIP : Indicates the useful knowledge or information for use.

⚠ CAUTION - Installation of the product -

Install the product on a sturdy, level table or bench.

- If you install the microscope on an unstable table or a tilted table, the microscope may topple and you may get injured.
- Install the product on an desk where the tilt of the top surface of the desk meets following conditions. Otherwise, the stage may move spontaneously.

  MX63 : 1° or less

  MX63L : 20′ or less
- For safety, do not place a mat, etc. under the device.

Use of the adjuster.

The center of gravity changes depending on the sample weight, sample position or stage movement, etc.
In particular, as MX63L uses a large-size stage, the center of gravity changes significantly.
To prevent the microscope from unexpected overturning, adjust the adjuster at the bottom of the microscope to take the overturning prevention actions.
For adjustment procedures, see “Use of the adjuster” (P.102).

Seismic protection

In order to prevent the microscope from overturning in case of seismic, etc., use the L-shape fixture to take the reinforcement countermeasures.
For the seismic protection, see “Seismic protection” (P.102).

⚠ CAUTION - Electric safety -

Always use the power cord provided by EVIDENT.

If the proper the power cord and cables are not used, the electric safety and the EMC (Electro-Magnetic Compatibility) performance of the product cannot be assured. If no power cord is provided, please select the proper power cord by referring to the section “Proper selection of the power cord” at the end of this instruction manual.

Always connect the ground terminal.

Connect the ground terminal of the power cord and that of the power outlet. If the product is not grounded, our intended electric safety and EMC performance of the product cannot be assured.

Do not use the product in close proximity to the sources of strong electromagnetic radiation.

Proper operation may be interfered. The electromagnetic environment should be evaluated prior to operation of the product.

Disconnect the power cord in case of emergency.

In case of emergency, be sure to unplug the power cord from the power cord connector on the product or from the wall power outlet. Install the product at the location where you can reach the power cord connector or the power outlet at hand to disconnect the power cord quickly.

This product is designed with intension to be used in the industrial environment for the EMC performance. Using this equipment in the residential environment may affect other equipment.

⚠ CAUTION - LED (light emitting diode) -

Do not look directly at the light from the LED unit for a long time.

If you feel that the light from LED unit is too bright during observation, adjust the light intensity using the brightness control knob before continuing the observation. The LED built in this product is basically eye-safe. However, do not look directly at the light from the LED unit for a long time, since it may cause damage to your eyes.

Do not look directly at the light coming out from the objective or the specular reflection light from the sample.

Do not look directly at the light coming out from the objective for a long time, since it may cause damage to your eyes.

Do not expose your skin to the light coming out from the objective for a long time.

If your skin is exposed to the light coming out from the objective for a long time, you may get burned.

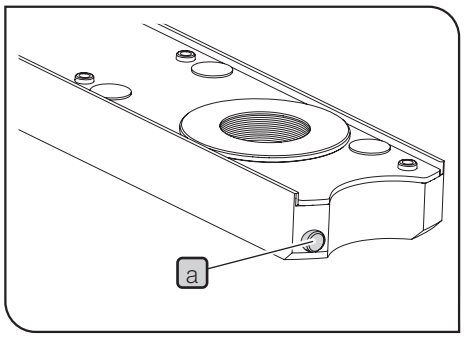

Do not press the micro switch of the MIX slider for reflected light observation (U-MIXR) with your finger.

If you press the micro switch a of the MIX slider for reflected light observation with your finger, the MIX slider for reflected light observation may emit the light.

Do not insert the MIX slider for reflected light observation (U-MIXR) upside down.

Do not insert the MIX slider for reflected light observation upside down. Otherwise, the light coming out from the MIX slider for reflected light observation enters your eyes through the eyepiece and your eyes may be damaged.

⚠ CAUTION - Lamp (halogen bulb and mercury burner) -

Remove the power cord from the product when replacing the lamp.

To avoid electric shock hazards and burns when replacing the lamp, set the main switch to ○ (OFF), and disconnect the power cord from the power supply in advance. When you replace the lamp immediately after use of the microscope, wait until the lamp housing and the lamp are sufficiently cooled down.

Applicable lamp	[For U-LH100L-3] 12V100WHAL-L (made by PHILIPS Co. 7724I) 12V100WHAL (made by PHILIPS Co. 7023) [For U-LH100IR] 12V100WHAL-L (made by PHILIPS Co. 7724I) [For U-LH100HGAPO, U-LH100HG] USH-103OL (made by Ushio Inc.)

Secure the sufficient space when installing the lamp housing.

The surface of the lamp housing on the back of the microscope gets very hot. Therefore, when installing the microscope, secure the sufficient space (100mm or more) around the lamp housing, particularly on the top and bottom surfaces. Also, if the power cord or cables contact the lamp housing, they may melt and cause electric shock. Be sure to lay out the power cord and cables sufficiently away from the lamp housing.

- As the UV ray of the mercury burner is harmful to your eyes, do not light the mercury burner when the lamp housing is not attached to the microscope.
- The lifetime of the illumination device is influenced significantly by operating conditions (ambient temperature/humidity, voltage of the power supply, lighting time, etc.), but is approximately eight(8) years or 20,000 illumination hours if operating it 8 hours a day, whichever is shorter, as a rough standard.
- Since the lamp generates a high heat, perform the inspection according to “12 Preventive inspection sheet for illumination devices” on page 106. If you find the unexpected phenomena, e.g. smoke, etc. during operation, turn OFF the power immediately and contact EVIDENT.

⚠ CAUTION - Liquid Light Guide -

Do not use the liquid light guide that is not conformed to this product.

You may get burned or your eyes may be damaged. For the liquid light guide that is conformed to this product, see page 60.

Do not remove the liquid light guide when the lamp is turned ON.

The light emitted from U-LGPS may cause a fire. In addition, you may get burned or your eyes may be damaged.

Remove the liquid light guide after the liquid light guide and the LDP light source are fully cooled down.

Otherwise, you may get burned.

⚠ CAUTION - Prevention of electric shock -

Never insert any tools or metal fragments in the air vents of the product.
It could cause electric shock or failure of the product.

Do not bend, pull or tie the power cord /cables.
Otherwise they could be damaged, causing a fire or an electric shock.

Keep the power cord and cables sufficiently away from the lamp housing.
If the power cord and cables contact a hot area of the lamp housing, they could melt and cause electric shock.

Do not touch the product with wet hands.
In particular, if you touch the main switch of the power unit or the power cord with wet hands, electric shock, ignition or failure of the product may be caused.

⚠ CAUTION - Prevention of injury

Be careful not to drop the glass plate.
If you are using the glass plate, be careful not to drop the glass plate. If the glass plate drops and is broken, you may get injured by the broken pieces.

⚠ CAUTION - Prevention of fire -

Do not repair, disassemble or remodel.
Never repair, disassemble or remodel this product. Otherwise, fire may result. The repair work must not be carried out except those authorized by EVIDENT.

If you need repairs, contact EVIDENT for assistance.

⚠ CAUTION - Safety symbols -

The following symbols are placed on this product.
Study the meaning of the symbols and always use the product in the safest possible manner.

Symbol	Meaning
⚠	Indicates a non-specific general hazard. Follow the description given after this symbol or in the instruction manual.
♨	Indicates that the surface becomes hot, and should not be touched with bare hands. It may cause burns.
ϟ	Indicates high voltage. Take special care to prevent electric shock.
✋	Indicates that care is required against your finger or hand being caught.
I	Indicates that the seesaw type main switch is ON. (Seesaw type is the type of switch where ON or OFF is selected by pressing it to ON or OFF side.)
O	Indicates that the seesaw type main switch is OFF.

Label position and instruction

The labels are attached to the portions which require special cautions during use and operation. Be sure to follow these instructions.

Label position	Label	Instructions in instruction manual	Page
Lower back of microscope frame / Center on the rear of microscope frame / Right side of microscope frame External power supply for halogen bulb (TH4-100/TH4-200) / Motorized Revolving nosepiece (U-P5REMC / U-D6REMC / U-D5BDREMC / U-P5BDREMC / U-D6BDREMC)	⚠	Caution for electric safety	3
		Caution for prevention of electric shock	5
Mount of lamp housing for reflected light illumination / DF converter (U-RCV) / Adapter for the mercury lamp housing (MX-HGAD) / Double lamp housing adapter (U-DULHA) / 100W halogen lamp housing for IR (U-LH100IR) / 100W halogen lamp housing (U-LH100L-3) /	♨	High temperature	4
100W mercury lamp housing (U-LH100HG) 100W mercury apo lamp housing (U-LH100HGAPO)	♨	High temperature	4
	ϟ	Electric shock	4
External power supply for mercury burner (U-RFL-T)	ϟ	Electric shock	4
LED and LDP light source (U-LGPS)	⚠	Caution for electric safety	3
		Caution for prevention of electric shock	5
	♨	High temperature	4
14x12-inch stage (MX-SIC1412R2)	✋	Pinch hazard	27
ND filter slider (U-25ND25-25/U-25ND25/U-25ND6) / Frost filter slider (U-25FR) / Interference contrast filter slider (U-25IF550) / L42 filter slider (U-25L42) / Light balancing filter slider (U-25LBD) / Yellow filter slider (U-25Y48) / Empty slider (U-25) / Light balancing amber filter slider (U-25LBA)	♨	High temperature	75

When caution labels are dirty or peeled off, contact EVIDENT for replacement or inquiries.

⚠ CAUTION - Carrying the product -

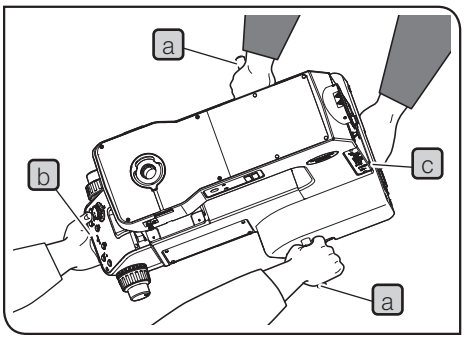

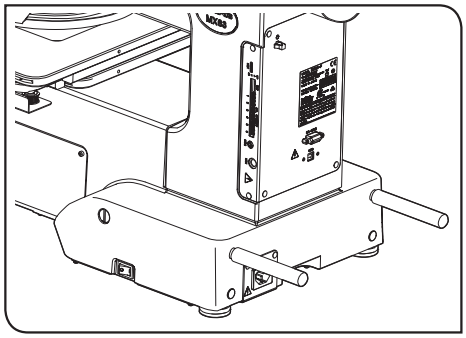

Remove samples and attached units.

Be sure to remove the samples and various units such as observation tube, lamp housing, stage, etc. before carrying the microscope.

If keeping units attached, the weight is increased and the risk of dropping the microscope increases.

Hold the holding part and the carrying rod of the microscope by two people.

1. Insert carrying rods a and b provided with microscope frame firmly into the left and right side panels respectively.
2. One person holds the carrying rod b and the front holding section c, and the other person holds the carrying rod a and the rear holding section d to carry the microscope carefully.
3. After movement, remove the carrying rods and either allow the user to keep them in a safe place or attach them to screw holes (2 positions) on the rear of the microscope as shown in the lower-left picture. Attach the screw hole caps provided with microscope frame to the screw holes left by removing the carrying rods.

Do not slide on the top surface of the table.

Do not move the microscope by sliding it on the top surface of the table. The rubber legs may be damaged.

If you need to pack this product for shipping to a distant location, etc., the dedicated transport tools and packaging materials are necessary. Be sure to contact EVIDENT for assistance.

Handling Precautions

NOTE

- **This product is a precision instrument. Handle it with care and avoid subjecting it to a sudden or severe impact.**
- **Never disassemble any part of the product. Otherwise, failure may result.**
- **Do not use the product in areas where it may be subjected to direct sunlight, high temperature and/or humidity, dust or vibrations.**
  (For conditions of operating environments, see “8 Specifications” on page 82.
- **Before attaching or detaching the units other than the MIX slider for reflected light observation (U-MIXR), set the main switch of the microscope to ○ (OFF).**

Installation space

To allow this microscope to deliver its full performance, secure the installation space having the minimum dimensions described below before assembly and installation of the microscope.

The dimensions of the area enclosed in alternate long and two short dashes lines indicate the stage movable range. The dimensions marked * vary depending on the lamp housing to be combined.

TIP
- For maintenance, you can secure a larger work space by changing the direction of the observation tube or moving the stage.
- The following installation space is set according to the SEMI standard guidelines (SEMI S8-0915). It is recommended to secure the appropriate installation space suitable for your operation referring to the following installation space, appearance of the system, eye point height, etc.

MX63 installation space

Unit: mm

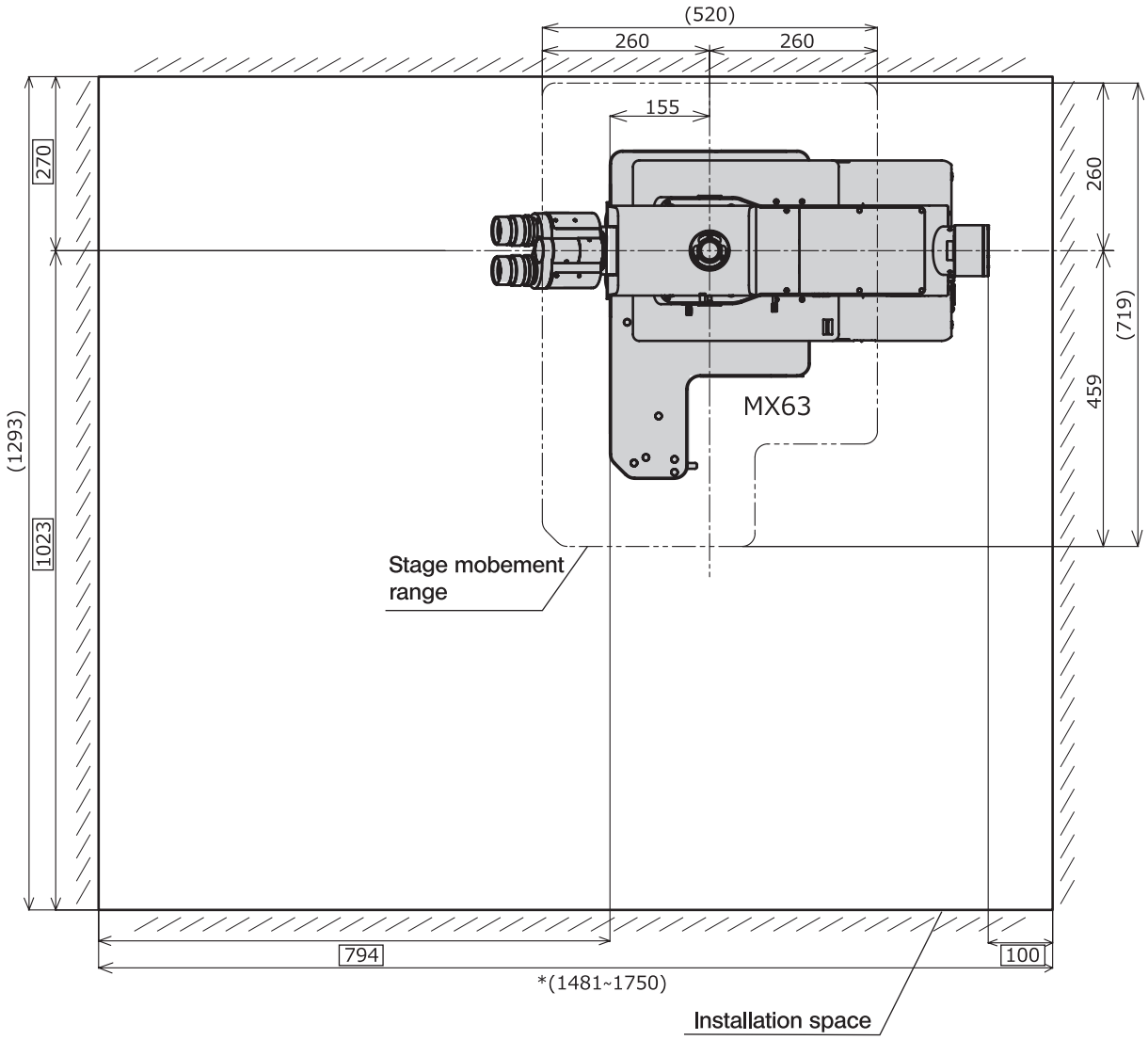

MX63L installation space

Unit: mm

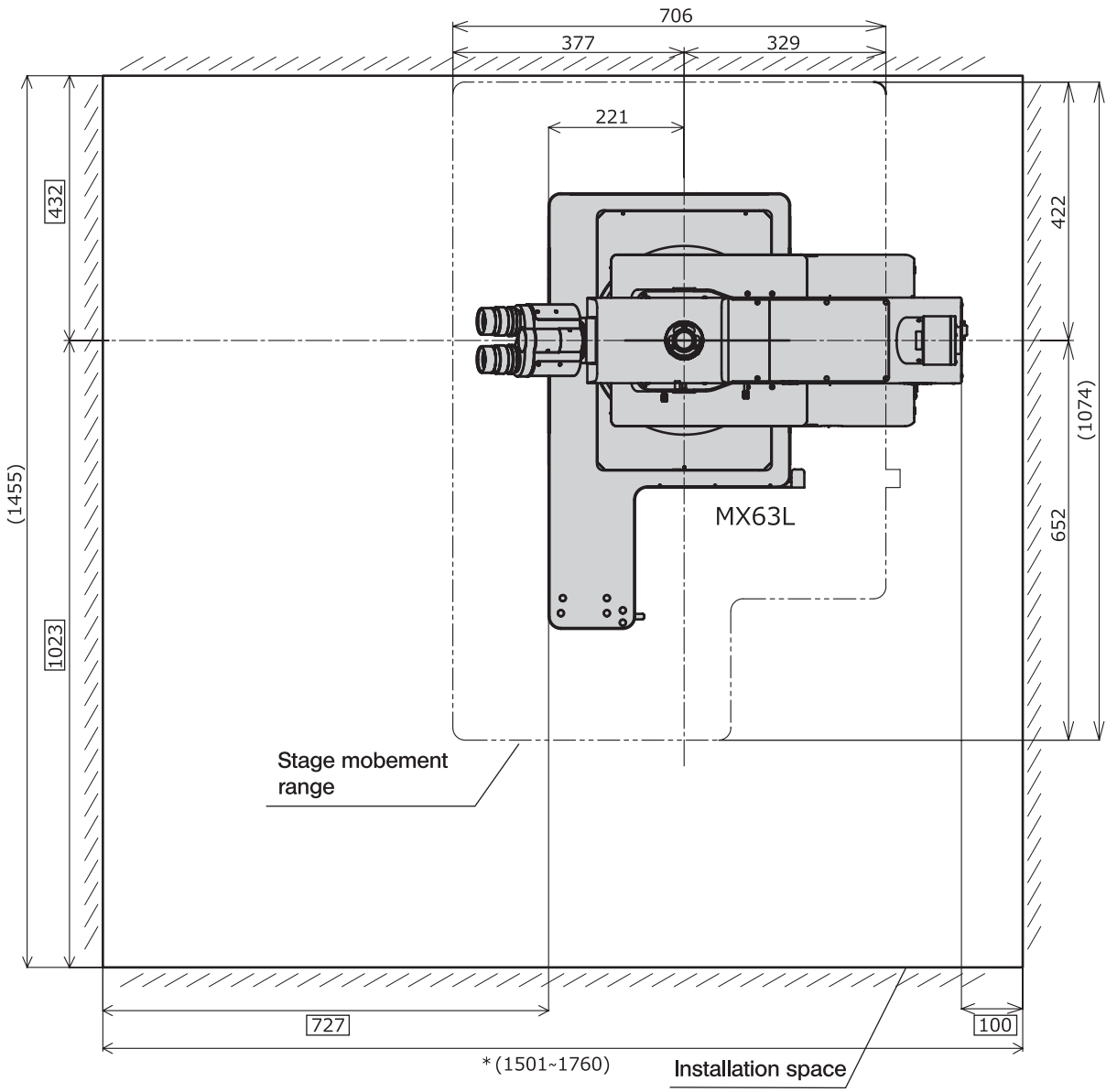

MX63 appearance, eye-point and center of gravity

Unit: mm

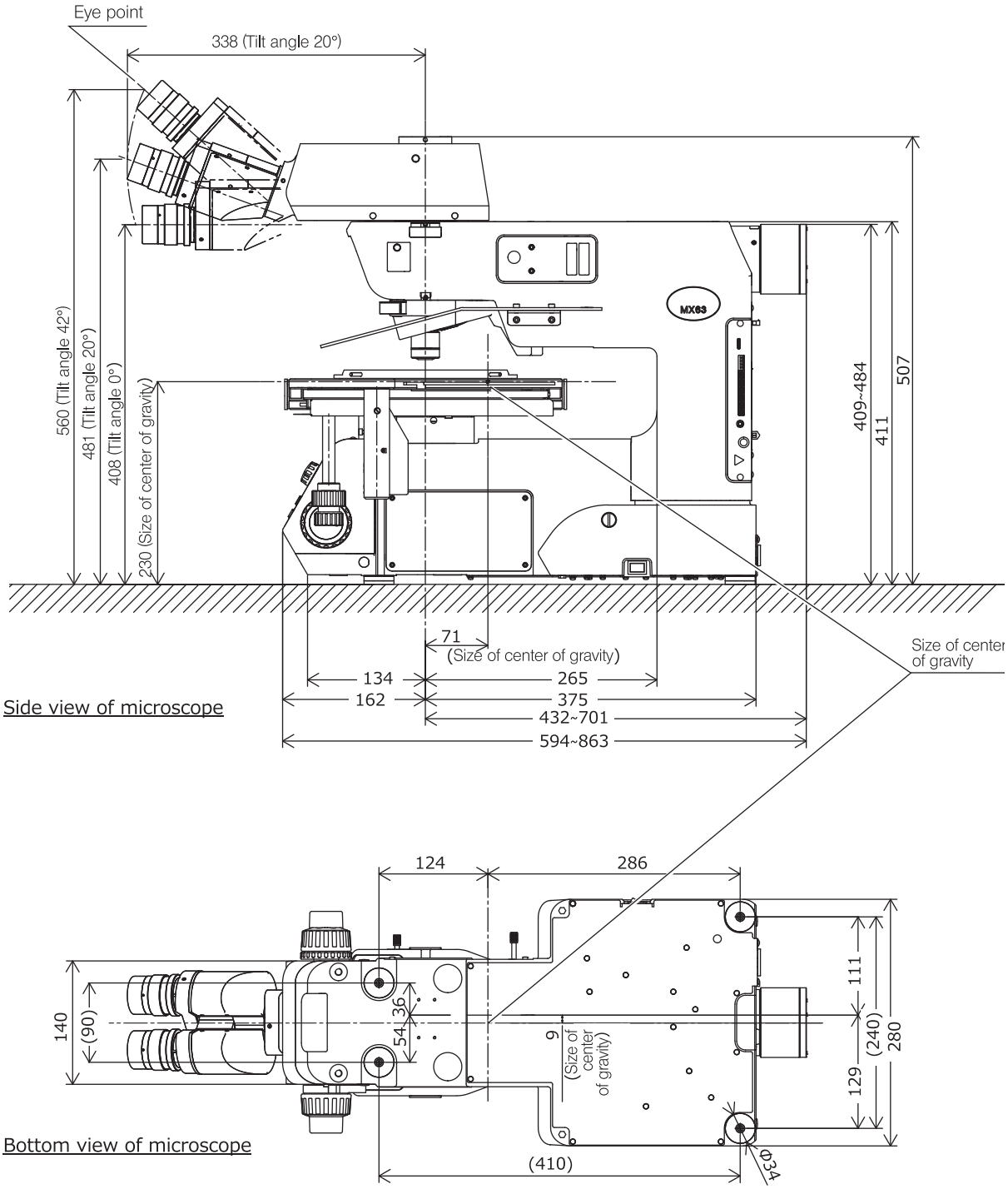

TIP The center of gravity is an approximate position in the standard combination for transmitted light observation. Note that the position varies depending on the sample weight, stage position and other units to be combined.

MX63L appearance, eye-point and center of gravity

Unit: mm

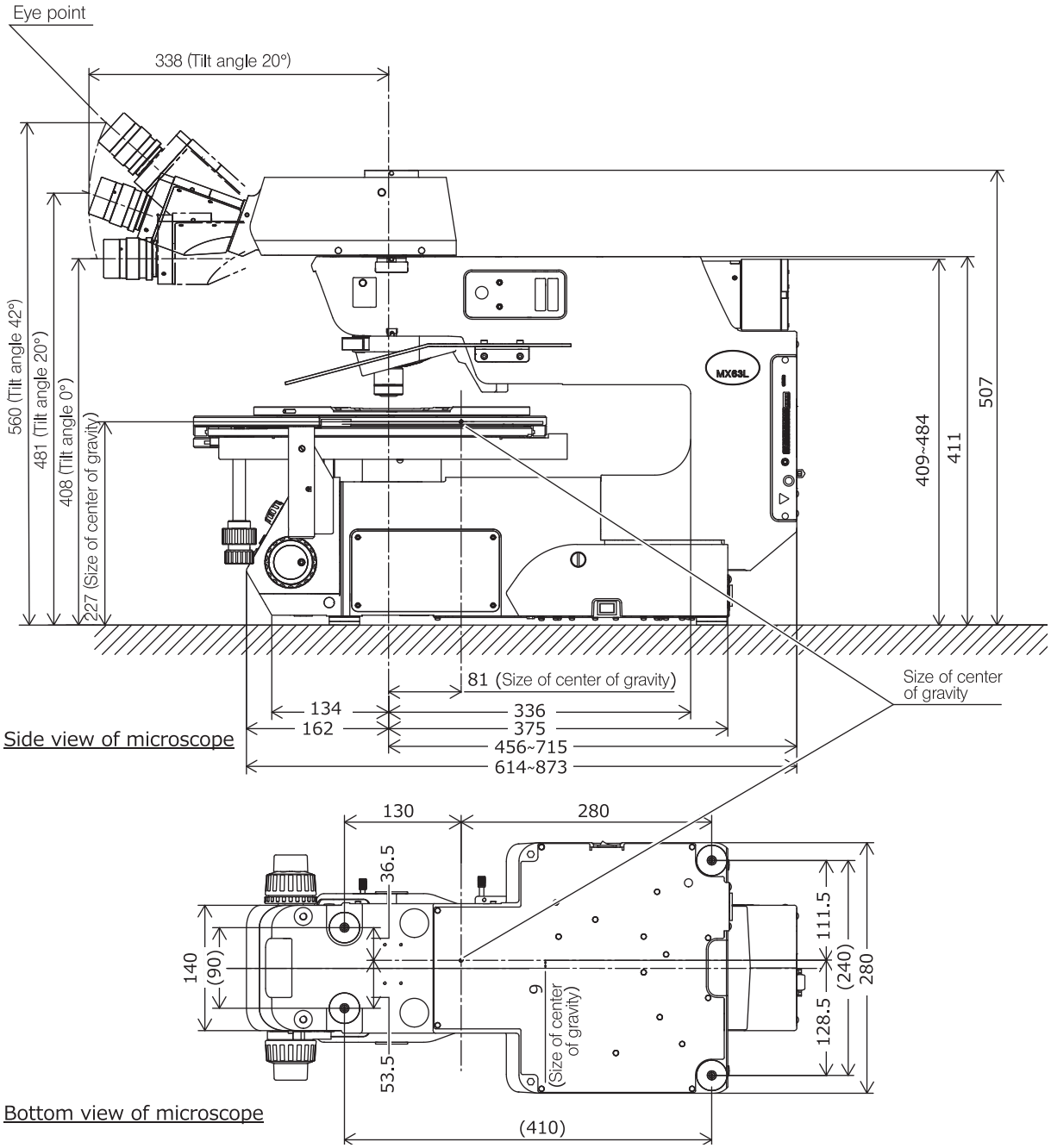

TIP The center of gravity is an approximate position in the standard combination for transmitted light observation. Note that the position varies depending on the sample weight, stage position and other units to be combined.

Maintenance and Storage

1. Do not leave stains or fingerprints on the lenses or filters. If they get dirty, blow away dust with a commercially available blower and gently wipe the lens or filter with a piece of cleaning paper (or clean gauze).
   Only when cleaning fingerprints and oil stains, slightly moisten a piece of cleaning paper with commercially available absolute alcohol and wipe them off with it.

⚠CAUTION **Since the absolute alcohol is highly flammable, it must be handled carefully. Be sure to keep it away from open flames or potential sources of electrical sparks. For example, the electrical equipment that is switched ON and OFF may cause the ignition of a fire. Also, always use absolute alcohol only in a well-ventilated room.**

2. Wipe the portions other than lenses with a dry soft cloth. If the dirt cannot be removed by dry-wiping, moisten a soft cloth with diluted neutral detergent or water, and wipe the dirty surface with it.

NOTE **Do not use the organic solvents because they may deteriorate the coated surface or plastic parts.**

3. If you use this product in the clean room, use pure water to clean this product.
4. After using this product, be sure to set the main switch to ○(OFF), wait until the lamp housing is cooled down sufficiently, and keep it covered with a dust cover during storage.
5. Before disposing of this product, be sure to check the regulations and rules of your local government and follow them. Contact EVIDENT for any questions.
6. If the hour counter of the power supply (U-RFL-T) shows 300 hours, set the main switch to ○(OFF) for safety purpose, wait 10 minutes or more and replace the lamp. (See page 70.)

NOTE **The mercury burner contains high-pressure gas in the tube. If you keep using the mercury burner exceeding its lifetime significantly, the distortion accumulates in the glass tube to cause the explosion in rare cases.**

In case that the mercury burner explodes

Follow the procedures below in case that the mercury burner explodes.

- Unplug the power cord from the outlet. Leave the place and ventilate for at least 30 minutes.
- After the burner and the lamp housing have cooled down, collect the remaining mercury with packing tape, paper or dropper, etc.
- Seal the collected mercury and tools used completely in a nonmetallic container, and ask the waste disposer to dispose of them.
- If there is any possibility that you have inhaled mercury steam, consult the doctor immediately and follow his/her instructions.

7. The used mercury burner must be disposed of as industrial waste. If you cannot dispose of it by yourself properly, contact EVIDENT for assistance.

1 Nomenclature of units

The following figure shows the main units only. (The following illustration shows MX63.)
For units marked " * ", refer to the instruction manuals provided separately.

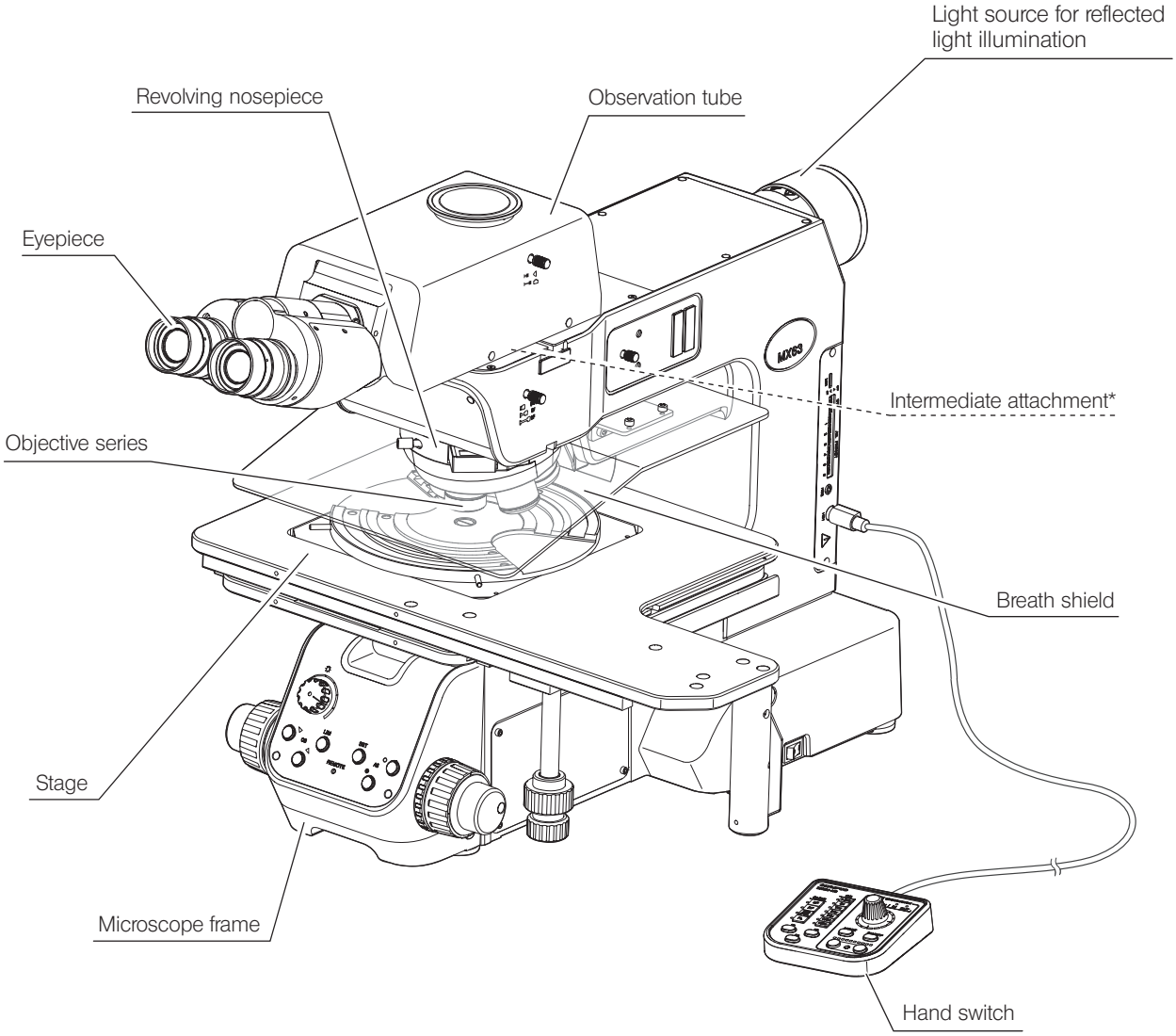

TIP For other units combinable with the microscope which are not described here, contact EVIDENT or refer to the latest catalogs.

Stage holder for MX63

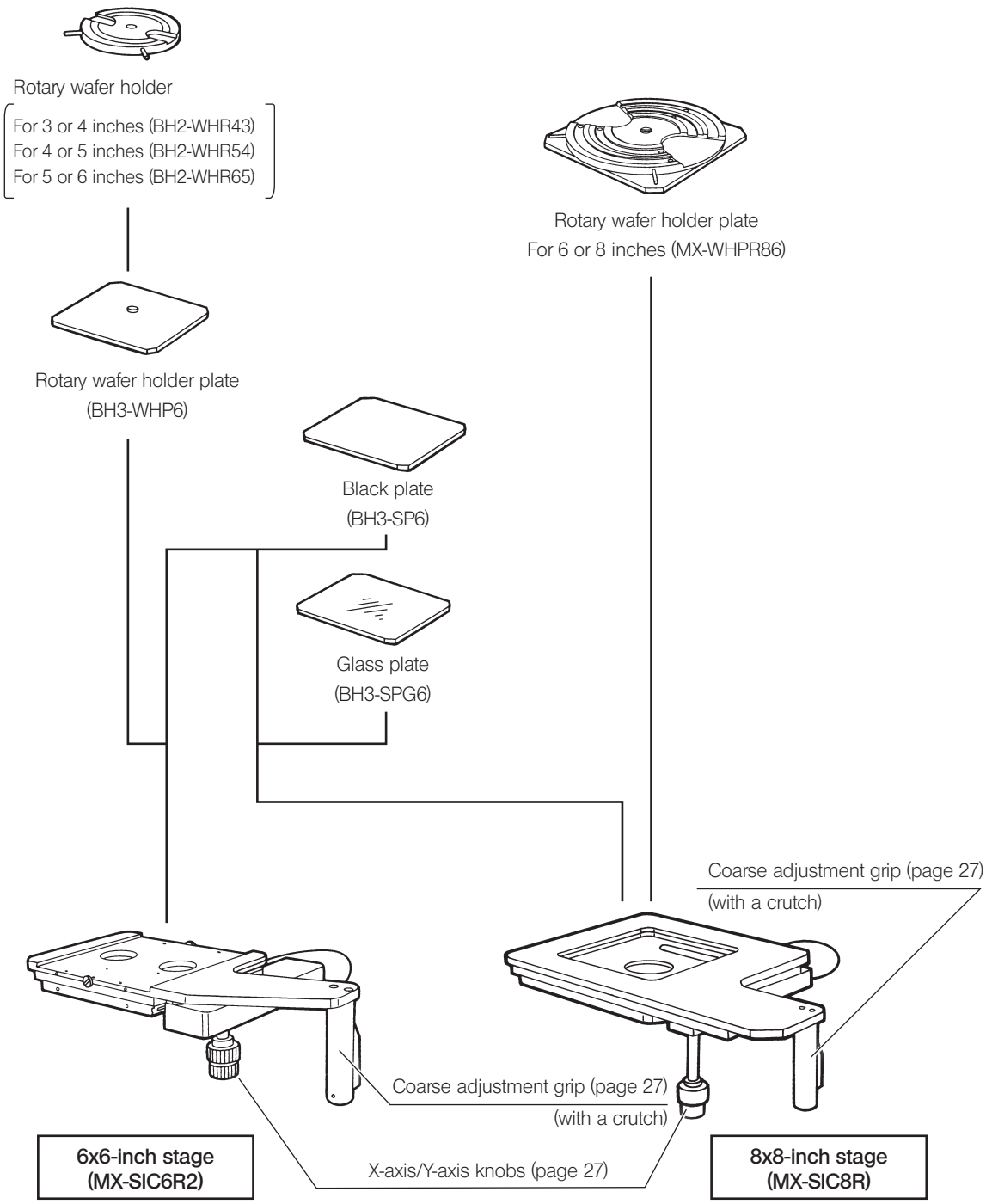

Stage holder for MX63L

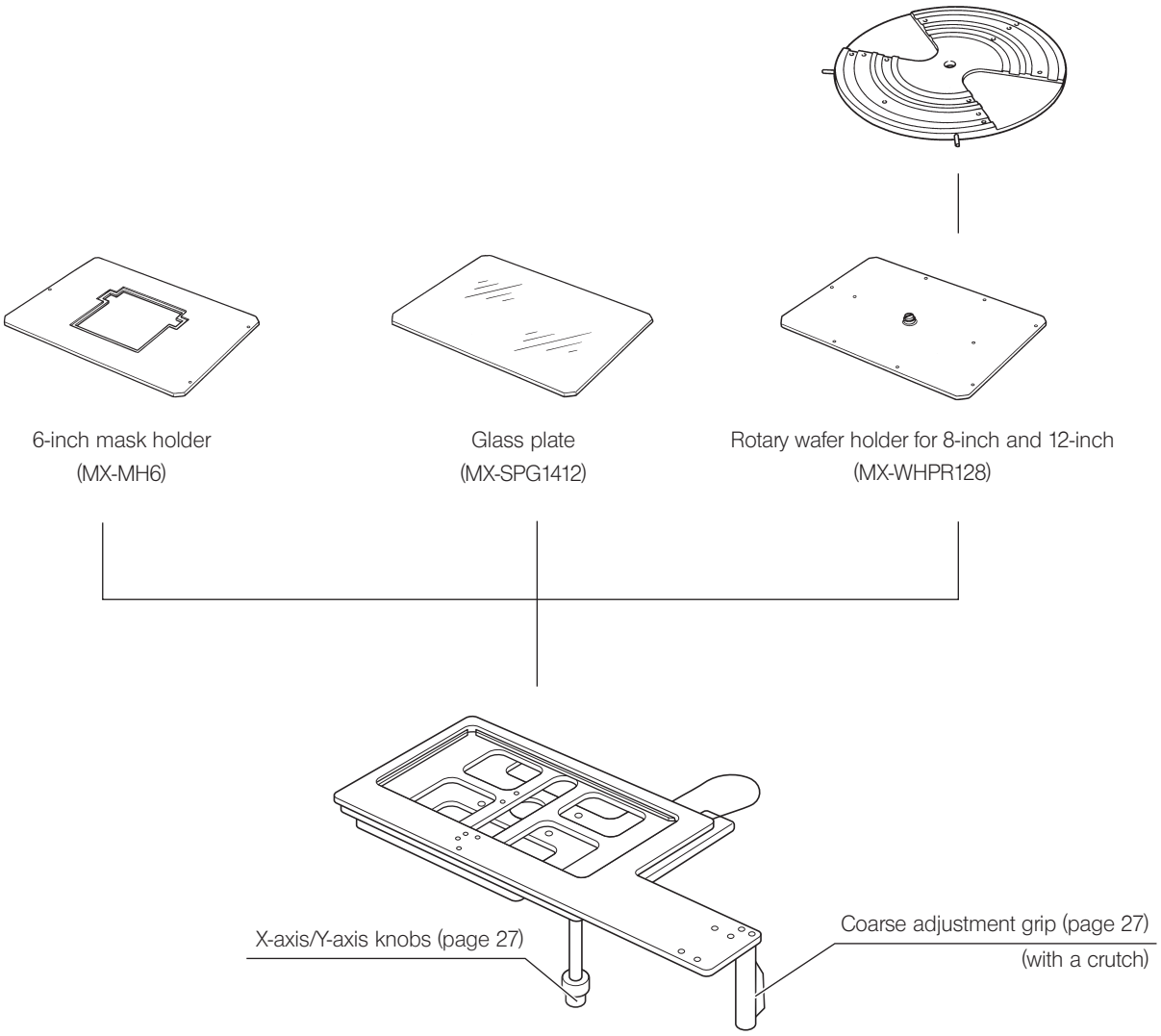

14x12-inch stage
(MX-SIC1412R2)

Mirror unit

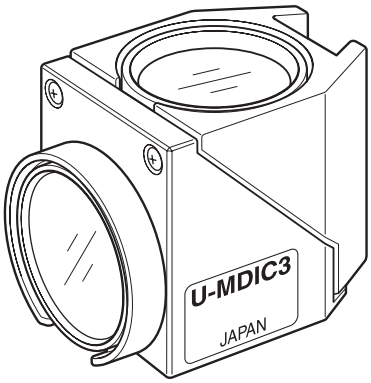

Various mirror units are available according to the purposes of observation.

Observation	Mirror unit names
Reflected light brightfield	Built-in the arm of microscope frame
Reflected light darkfield	
Reflected light DIC	U-MDIC3, U-MDICAF3
Reflected light simple polarization	U-MDIC3, U-MDICAF3
Reflected light fluorescence	U-MWBS3, U-MWGS3, U-MWUS3 U-MF2 (optional idle mirror unit frame)
Transmitted light simple polarization	U-MDICT3, U-MDIC3

Hand switch (BX3M-HS)

NOTE **Install the hand switch at the position from which it will not drop.**

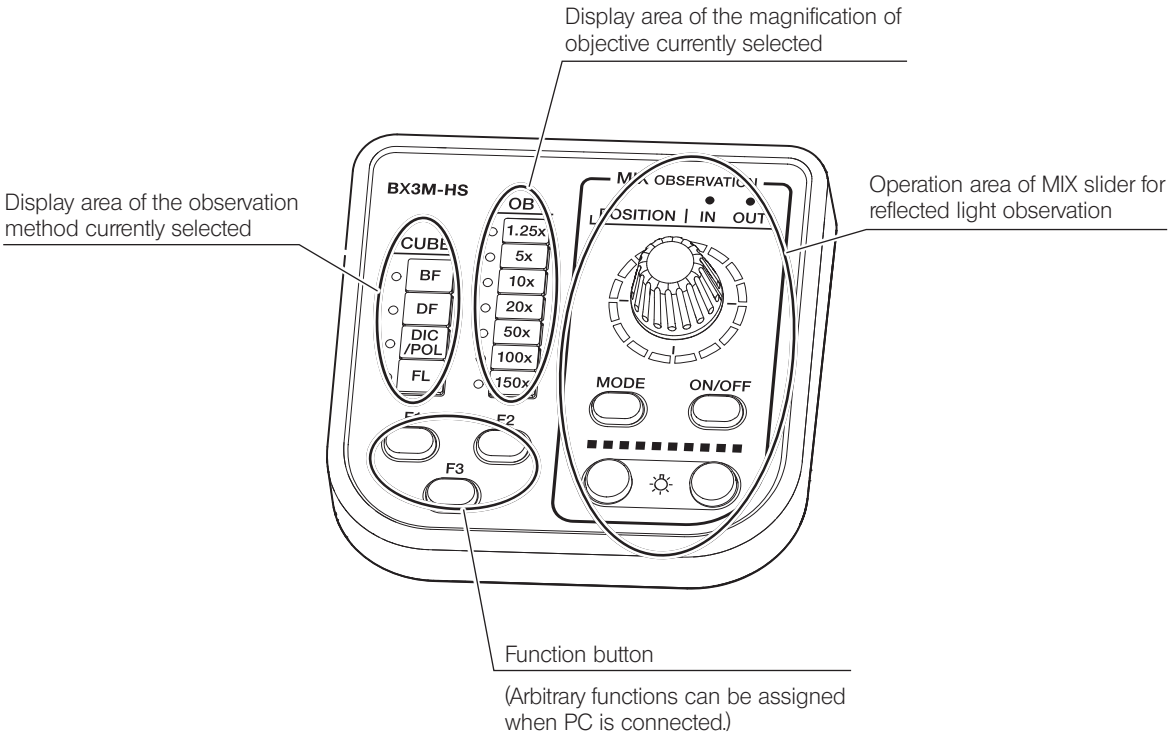

The transmitted light illumination unit is attached by EVIDENT.

TIP The following illustration shows the view without stage in order to show the condenser without obstacle.

Transmitted light illumination unit (MX-TILLB)

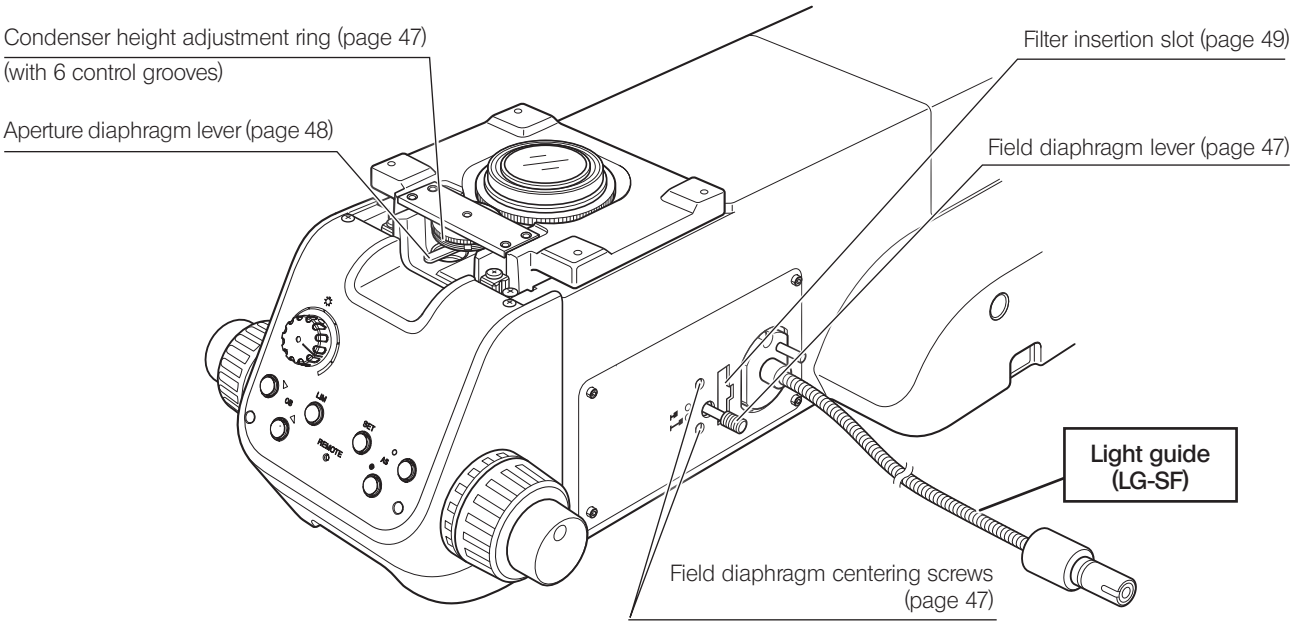

Transmitted light illumination unit (MX-TILLB)

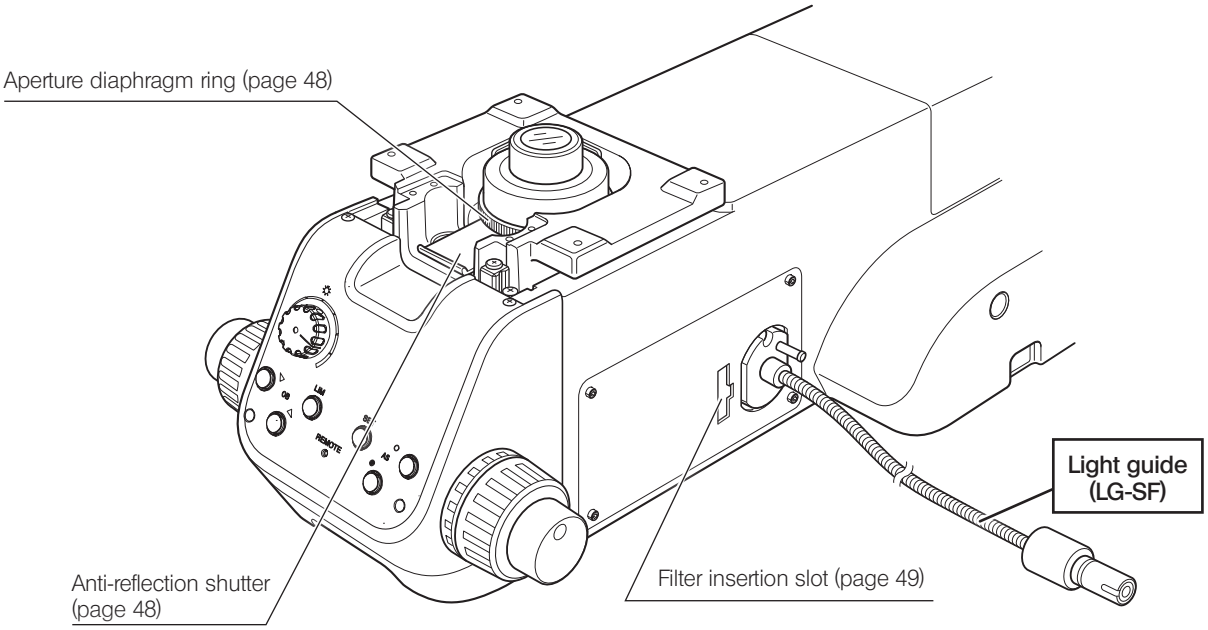

2 List of combinable units

●: Combination available (including units with restrictions)
×: Combination prohibited
—: Unnecessary for observation

Units \ Observation method		Reflected light							Transmitted light	
		Brightfield	Darkfield	Brightfield/ darkfield simultaneously	Simple polarization	Differential interference contrast	Fluorescence	Infrared	Brightfield	Simple polarization
Microscope frame	MX63-F	●	●	●	●	●	●	●	●	●
	MX63L-F	●	●	●	●	●	●	●	●	●
Observation tube	U-TR30-2	●	●	●	●	●	●	×	●	●
	U-ETR-4	●	●	●	●	●	●	×	●	●
	U-TTR-2	●	●	●	●	●	●	×	●	●
	U-SWTR-3	●	●	●	●	●	●	×	●	●
	U-SWETTR-5	●	●	●	●	●	●	×	●	●
	MX-SWETTR	●	●	●	●	●	●	×	●	●
	U-BI30-2	●	●	●	●	●	●	×	●	●
	U-TBI-3	●	●	●	●	●	●	×	●	●
	U-TLU	●	●	●	●	●	●	×	●	●
	U-TR30IR	●	×	×	×	×	×	●	●	×
	U-TLUIR	●	×	×	×	×	×	●	●	×
Intermediate attachment	U-CA	●	●	●	●	●	●	×	●	●
	U-ECA	●	●	●	●	●	●	×	●	●
	U-EPA2	●	●	●	●	●	●	●	●	●
	U-DP	●	●	●	●	●	●	●	●	●
	U-DP1XC	●	●	●	●	●	●	●	●	●
Illuminator option	U-RCV	●	●	●	●	●	●	×	—	—
	MX-HGAD	●	●	●	●	●	●	×	—	—
	U-DULHA	●	●	●	●	●	●	×	—	—
	U-LLGAD	●	●	●	●	●	●	×	—	—
Light source for transmitted light illumination	LG-LSLED*	—	—	—	—	—	—	—	●	●
Light source for reflected light illumination	BX3M-LEDR	●	●	●	●	●	×	×	—	—
	U-LH100L-3	●	●	●	●	●	×	×	—	—
	U-LH100IR	●	×	×	×	×	×	●	—	—
	U-LH100HG	●	●	●	●	●	●	×	—	—
	U-LH100HGAPO	●	●	●	●	●	●	×	—	—
	U-LGPS	●	●	●	●	●	●	×	—	—
Power supply	TH4-100	●	●	●	●	●	×	●	—	—
	TH4-200	●	●	●	●	●	×	●	—	—
	U-RMT	●	●	●	●	●	×	●	—	—
	U-RFL-T	●	●	●	●	●	●	×	—	—

* Name and detail specifications of this product might differ in Europe, Middle East and Africa.

●: Combination available (including units with restrictions)
×: Combination prohibited
—: Unnecessary for observation

Units \ Observation method		Reflected light							Transmitted light	
		Brightfield	Darkfield	Brightfield/ darkfield simultaneously	Simple polarization	Differential interference contrast	Fluorescence	Infrared	Brightfield	Simple polarization
Light sources	U-LLG150	●	●	●	●	●	●	×	—	—
	U-LLG300	●	●	●	●	●	●	×	—	—
	MX-LLHECBL	●	●	●	●	●	●	×	—	—
	MX-TILLA	—	—	—	—	—	—	—	●	●
	MX-TILLB	—	—	—	—	—	—	—	●	●
	LG-SF	—	—	—	—	—	—	—	●	●
Revolving nosepiece	U-P5REMC	●	×	×	●	●	●	●	●	●
	U-D6REMC	●	×	×	●	●	●	●	●	●
	U-D5BDREMC	●	●	●	●	●	●	×	●	●
	U-P5BDREMC	●	●	●	●	●	●	×	●	●
	U-D6BDREMC	●	●	●	●	●	●	×	●	●
Objective adapter	BD-M-AD	●	●	×	●	●	●	—	●	●
Stage	MX-SIC6R2	●	●	●	●	●	●	●	×	×
	MX-SIC8R	●	●	●	●	●	●	●	●	●
	MX-SIC1412R2	●	●	●	●	●	●	●	●	●
Stage option	BH3-WHP6	●	●	●	●	●	●	●	×	×
	BH2-WHR43	●	●	●	●	●	●	●	×	×
	BH2-WHR54	●	●	●	●	●	●	●	×	×
	BH2-WHR65	●	●	●	●	●	●	●	×	×
	BH3-SP6	●	●	●	●	●	●	●	●	●
	MX-WHPR86	●	●	●	●	●	●	●	●	●
	BH3-SPG6	●	●	●	●	●	●	×	●	●
	MX-WHPR128	●	●	●	●	●	●	●	●	●
	MX-SPG1412	●	●	●	●	●	●	×	●	●
	MX-MH6	●	●	●	●	●	●	●	●	●
Slider for reflected light illumination	U-25ND6	●	●	●	●	●	●	●	—	—
	U-25ND25	●	●	●	●	●	●	●	—	—
	U-25ND50	●	●	●	●	●	●	●	—	—
	U-25LBD	●	●	●	●	●	×	×	—	—
	U-25IF550	●	●	●	●	●	×	×	—	—
	U-25Y48	●	●	●	●	●	×	×	—	—
	U-25L42	●	●	●	●	●	×	×	—	—
	U-25FR	●	●	●	●	●	×	×	—	—
	U-25LBA	●	●	●	●	●	×	×	—	—
	U-25	●	●	●	●	●	●	●	—	—
	U-BP1100IR	×	×	×	×	×	×	●	—	—
	U-BP1200IR	×	×	×	×	×	×	●	—	—
Slider for differential interference contrast	U-DICR	×	×	×	×	●	×	×	×	×
	U-DICRHC	×	×	×	×	●	×	×	×	×
	U-DICRHC	×	×	×	×	●	×	×	×	×

●: Combination available (including units with restrictions)
×: Combination prohibited
—: Unnecessary for observation

Units \ Observation method		Reflected light							Transmitted light	
		Brightfield	Darkfield	Brightfield/ darkfield simultaneously	Simple polarization	Differential interference contrast	Fluorescence	Infrared	Brightfield	Simple polarization
MIX slider for reflected light observation	U-MIXR	—	×	●	—	×	×	—	—	—
	U-MIXRCBL	—	×	●	—	×	×	—	—	—
Polarizing element	U-AN360-3	×	×	×	●	●	×	×	×	●
	U-PO3	×	×	×	×	×	×	×	×	●
Filter	25LBD	●	●	●	●	●	×	×	—	—
	25ND6	●	●	●	●	●	●	●	—	—
	25ND25	●	●	●	●	●	●	●	—	—
	30.5S-LBD	—	—	—	—	—	—	—	●	●
Mirror unit	U-MDIC3	×	×	×	●	●	×	×	×	●
	U-MDICAF3	×	×	×	●	●	×	×	×	×
	U-MWBS3	×	×	×	×	×	●	×	—	—
	U-MWGS3	×	×	×	×	×	●	×	—	—
	U-MWUS3	×	×	×	×	×	●	×	—	—
	U-MF2	×	×	×	×	×	●	×	×	×
	U-MDICT3	×	×	×	×	×	×	×	×	●
Focus aid	MX-FA	●	×	×	●	●	×	×	×	×
Camera adapter	U-TV1XC	●	●	●	●	●	●	●	●	●
	U-TV0.63XC	●	●	●	●	●	●	×	●	●
	U-TV0.5XC-3	●	●	●	●	●	●	×	●	●
	U-TV0.35XC-2	●	●	●	●	●	●	×	●	●
	U-TV0.25XC	●	●	●	●	●	●	×	●	●
	U-CMAD3	●	●	●	●	●	●	●	●	●
	U-TV1X-2	●	●	●	●	●	●	●	●	●
Controller	DP2-SAL	●	●	●	●	●	●	×	●	●
Hand switch	BX3M-HS	●	●	●	●	●	●	●	●	●
	U-HSEXP	●	●	●	●	●	●	●	●	●
	TH4-HS	●	●	●	●	●	×	●	●	●
Breath shield	MX-BSH-ESD-2	●	●	●	●	●	●	●	●	●
Eyepiece	WHN10X	●	●	●	●	●	●	—	●	●
	WHN10X-H	●	●	●	●	●	●	—	●	●
	CROSSWHN10X	●	●	●	●	●	●	—	●	●
	SWH10X-H	●	●	●	●	●	●	—	●	●
	CROSS-SWH10X	●	●	●	●	●	●	—	●	●
Immersion oil	IMMOIL-F30CC	●	×	×	●	×	×	×	●	×
Objective	See “9 Optical performance list «UIS2 series»” on page 84.									

EVIDENT classifies MX63-F, MX63L-F as an optical microscope and other units as optical microscope accessories.

Memo

3 Observation procedures

3-1 Reflected light brightfield/darkfield observation procedures

This section describes the operating procedures of the reflected light brightfield/darkfield observations which are the basis of observation methods. The differential interference contrast observation, simple polarization observation, etc. are described in "5 Observation methods" on page 44.

NOTE **When using only the reflected light illumination while the transmitted light illumination unit is installed, set the aperture diaphragm on the front of the base of microscope frame to the minimum position or insert the anti-reflection shutter.**

	Operation part	Page
1 Turn ON the main switch.	Main switch	P.24
2 Select BF (reflected light brightfield) or DF (reflected light darkfield) according to observation purposes.	Observation light path selection knob	P.25
BF: The aperture diaphragm is set per each objective automatically. DF: The aperture diaphragm is set to the OPEN position automatically.		
3 [Trinocular tube only] Push in the light path selection knob.	Light path selection knob	P.26
4 Remove the analyzer, mirror unit, etc. from the light path.		
5 Place a sample for observation on the stage.	Stage plate X-axis/Y-axis knobs	P.27 P.27
6 Engage the 5X or 10X objective in the light path using the objective selection button and bring the sample into focus.	Objective selection button Coarse focusing knob / Fine focusing knob	P.28 P.29
7 Adjust the brightness.	Light intensity knob	P.32
8 Adjust the interpupillary distance.	Interpupillary distance adjustment scale	P.35
9 Adjust the diopter.	Diopter adjustment ring	P.35
10 Engage the objective with the magnification to be used in the light path and bring the sample into focus.	Objective selection button Coarse focusing knob / Fine focusing knob	P.28 P.29
11 Adjust the brightness.	Light intensity knob	P.32
12 Insert the required filters.	Filter insertion slot	P.39
13 Use only for fine adjustment of aperture diaphragm during brightfield observation.	Aperture diaphragm open / close button	P.38

Observation

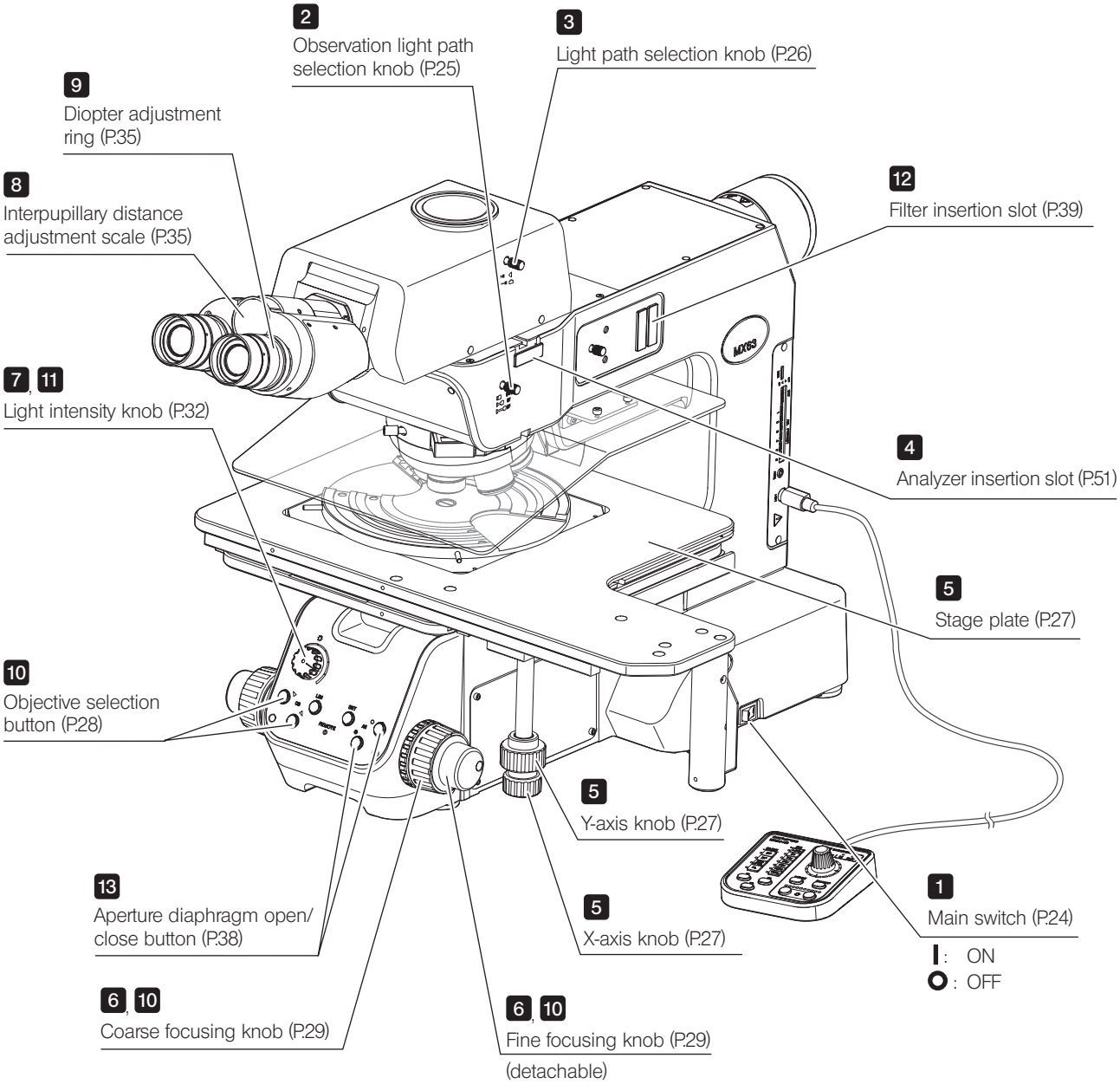

TIP Make a copy of this flow chart and diagram, and place it near the microscope so that you can use it when operating the microscope.

3-2 Main switch

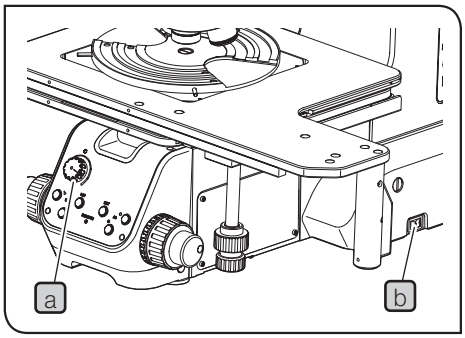

1 Rotate the light intensity knob a counterclockwise fully and set the main switch b to I (ON).

CAUTION **In case of emergency, disconnect the power cord from the product , and set the main switch to O (OFF) to shut down the power supply. Do not place any object near the main switch so that the main switch operation will not be interfered.**

TIP
- When the power is turned ON, the buzzer sound is heard once. The buzzer sound can be set to silent by setting the DIP switches. For setting procedures, see “Setting the DIP switch / AS.PRESET switch” (P.98).
- After the power is turned ON, the aperture diaphragm starts initializing and the aperture diaphragm open/close button on the front panel blinks for several seconds.

2 If following units are combined, set the main switch of the respective unit to I (ON).

Combinable units	Unit to set to ON
Mercury lamp housing	Main switch of the power supply for mercury burner (U-RFL-T)*
Halogen lamp housing	Main switch of the power supply for halogen bulb (TH4-100/TH4-200)
Light source	Main switch of the LED and LDP light source (U-LGPS)
LED light source for light guide	Main switch of the LED light source for light guide (LG-LSLED)**

* In general, the arc image becomes stable 5 to 10 minutes after turning ON the power supply, but the discharge type mercury burner may not turn ON by one operation due to its nature. In this case, set the main switch to O (OFF) once, wait 5 to 10 seconds and set it to I (ON) again.

** Name and detail specifications of this product might differ in Europe, Middle East and Africa.

For details, refer to the instruction manual provided with the respective unit.

3-3 Selecting the observation method (BF/DF)

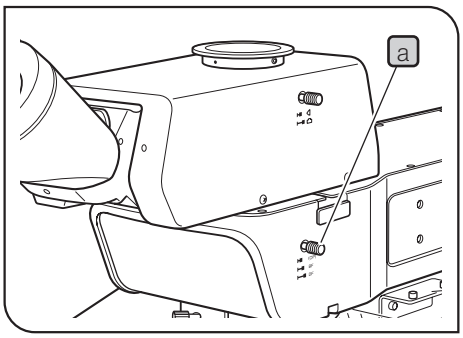

1 Slide the observation light path selection knob a to select the light path.

(OP)	Optional mirror unit*	
BF	Brightfield observation	The aperture diaphragm is set per each objective automatically.
DF	Darkfield observation	The aperture diaphragm is set to the OPEN position automatically.

* The 2-level selection (BF↔DF) is set as factory default. However, if the optional mirror unit is attached (by the EVIDENT representative), the 3-level selection is available.

When the hand switch is combined

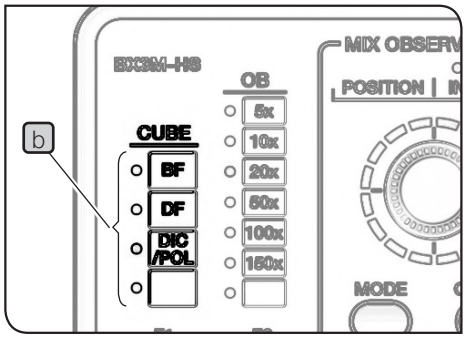

The lighting of the CUBE indicator b of the hand switch (BX3M-HS) is changed according to the selection of the observation method selection knob.

3-4 Selecting between the eyepiece light path and the camera light path

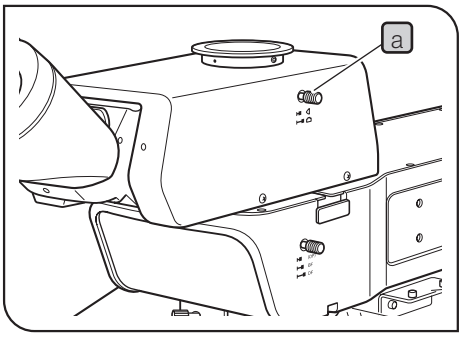

This function is available when the trinocular tube is combined.

You can select the light path for observing with the eyepiece or the light path for observing with the display, etc. through the camera.

1 Slide the light path selection knob a of the trinocular tube to select the required light path.

Trinocular tube	Light path selection knob position	Eyepiece	Camera
MX-SWETTR U-ETR-4	Pressed in	100%	0%
	Pulled out	0%	100%
U-SWTR-3 U-TR30-2	Pressed in	100%	0%
	Middle position	20%	80%
	Pulled out	0%	100%
U-TR30IR (for infrared observation)	Pressed in	100%	0%
	Middle position*	0%	0%
	Pulled out	0%	100%
U-TTR-2	Pressed in	50%	50%
	Middle position	100%	0%
	Pulled out	0%	100%
U-SWETTR-5	Pressed in	100%	0%
	Pulled out	20%	80%

* Shutter

3-5 Placing a sample

1 Placing a sample

TIP The maximum weight loadable on the stage is described below (including holders).
- MX-SIC8R/MX-SIC6R: 2 kg
- MX-SIC1412R: 3.5 kg

NOTE **If the sample exceeding the specified weight is placed on the stage, the feeling of stage movement will be deteriorated or the stage will be worn out.**

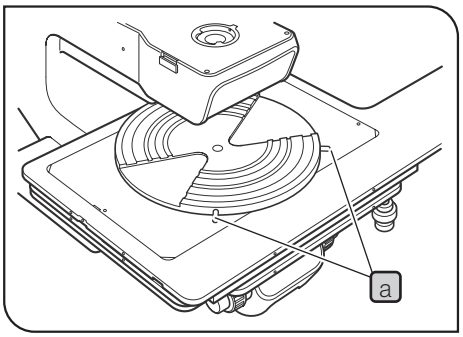

1 Place the sample on the stage plate or the holder plate before observation.

TIP
- If the sample is not flat or parallel, the reflected light does not return to the objective and you cannot perform the observation.
- If you observe the large-size sample, remove the stage plate and place the sample on the stage directly.
- When using the wafer holder plate, use the knob a to rotate the wafer holder.
- When using the glass plate, you can observe with the transmitted light illumination.

2 Moving the stage

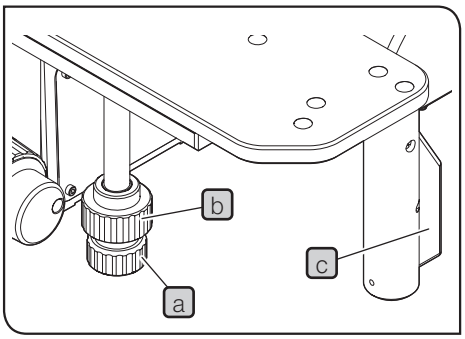

1 Rotate the X-axis (horizontal) knob a and Y-axis (vertical) knob b placed at the lower right of the stage and move the stage.

TIP The stage moves approx. 50 mm in Y-axis (vertical) direction by one turn of the knob and approx. 37 mm in X-axis (horizontal) direction by one turn of the knob.

Using the grip clutch

You can move the stage with light force and freely by grabbing this grip clutch c.

NOTE
- **If you do not grab the clutch firmly to the end, the X-axis/Y-axis knobs may rotate together abruptly to cause the damage.**
- **If the excess downward force is applied to the grip, the stage may be deformed and the stage plates may contact with each other. Do not apply the excess force to the grip.**

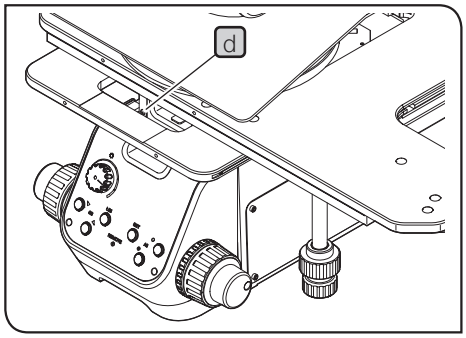

CAUTION **When moving the stage, be careful not to allow your fingers, etc. caught in the aperture d of the stage.**

TIP Stickiness between clutch and belt for the X/Y axis knobs
If the stage is not moved for a long period, the clutch and the belt will stick together and the clutch function will not work smoothly. In this case, hold the X-axis/Y-axis knobs firmly with hand to prevent them from rotating. And then, grab the grip clutch completely to the end and move the stage back and forth, left and right to remove the stickiness.

3-6 Selecting the objective

NOTE
- **In order to prevent the sample from colliding with the objective, be sure to change the objective in order from the low magnification to the high magnification before focusing.**
- **Do not rotate the revolving nosepiece directly with hand. Rotating by hand may damage the gear heads or cause other malfunctions.**

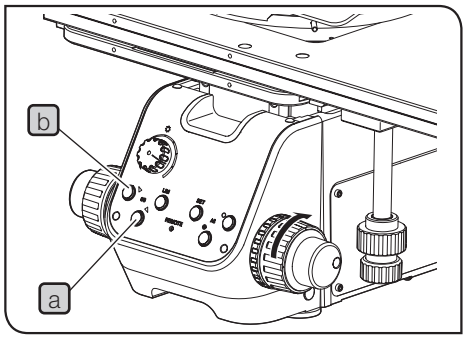

1 Pressing the objective selection button a on the front panel will rotate the revolving nosepiece in the ▶ direction by one step. To rotate it in the opposite direction, press the other objective selection button b to rotate in ◀ direction.

TIP Pressing this objective selection button for multiple times consecutively allows you to select the desired objective.

When the hand switch is combined

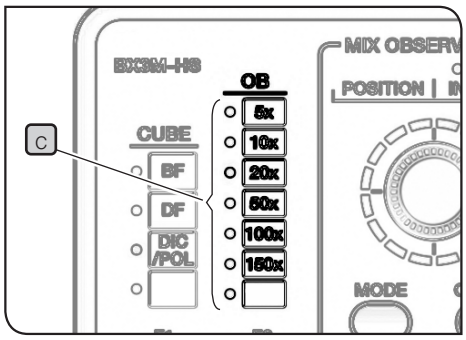

The lighting of the OB indicator c of the hand switch (BX3M-HS) changes according to the objective selection button.

3-7 Focusing

1 Focusing

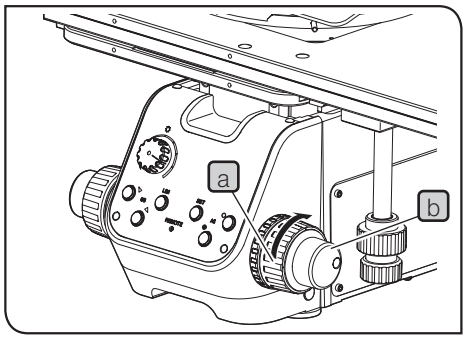

1 Rotate the coarse focusing knob a and the fine focusing knob b in the arrow direction to move the stage upward. (The sample approaches the objective.)

2 Adjusting the tension of the coarse focusing knob

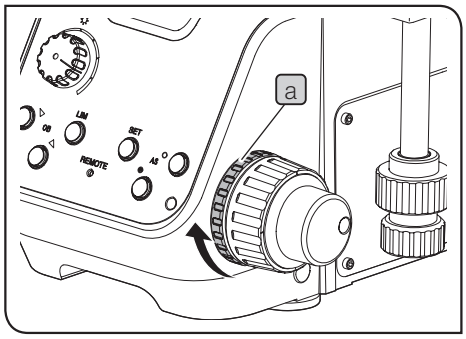

The tension of the coarse focusing knob is pre-adjusted for easy use, but if you wish, you can change the tension. Rotating the coarse focusing tension adjustment ring a in the arrow direction increases the tension and in the opposite direction decreases the tension.

TIP If the stage descends by its own weight or the focus obtained with the fine focusing knob is lost soon, the coarse focusing tension adjustment ring is set too loose.
In this case, rotate the coarse focusing tension adjustment ring a clockwise to increase the tension.

3 Attaching/detaching the fine focusing knob

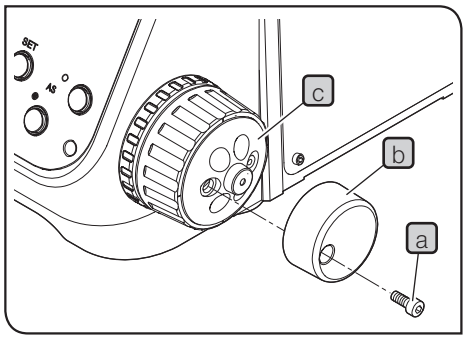

NOTE **The fine focusing knob is designed to be detachable. This prevents your hand from contacting the fine focusing knob when operating the X-axis /Y-axis knob.**

1 Loosen the clamping screw a with the Allen screwdriver to remove the fine focusing knob b.

NOTE **The fine adjustment dial c is used for fine adjustment by a finger-tip or ball of a finger.**

4 Using the pre-focusing lever

Using the pre-focusing lever controls the vertical movement of the stage no further than the arbitrary position when rotating the pre-focusing lever. With this function, the approximate focal position can be reproduced or the collision between the stage and the objective can be prevented. Note, even though the pre-focusing lever is used, the vertical movement of the stage is not restricted with the fine focusing knob.

Setting the upper limit of coarse adjustment

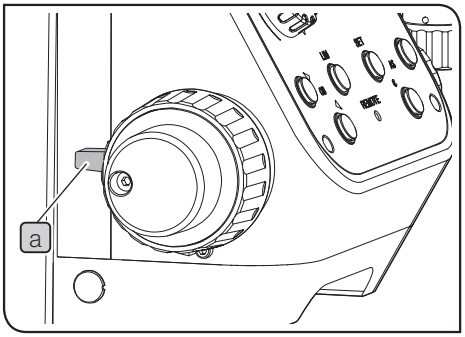

1. Bring the sample into focus.
2. Rotate the pre-focusing lever a in the arrow direction to set to LOCK. The current stage position is set to the upper limit when rotating the coarse focusing knob.

Focusing in LOCK status

1. Rotate the coarse focusing knob to lower the stage position and place the different sample on the stage.
2. Rotate the coarse focusing knob to lower the stage and when the stage touches the upper limit, stop rotating the coarse focusing knob.

TIP If the thickness of the sample is almost the same, the sample is in focus approximately at the upper limit position.

3. Rotate the fine focusing knob to bring the sample into focus.

Canceling LOCK

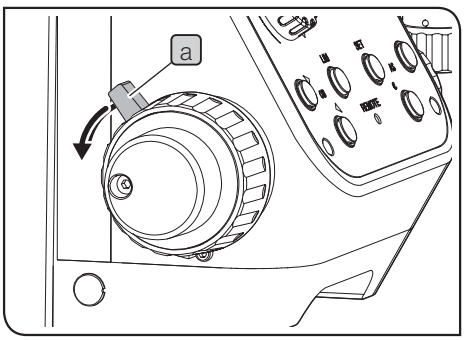

1. Rotate the pre-focusing lever a in the arrow direction to cancel LOCK.

NOTE **When the pre-focusing lever is set to the LOCK position, the stage is not lowered to the lower limit. To lower the stage to the lower limit, cancel LOCK.**

5 Using the focus aid (MX-FA)

When observing the sample with flat and mirror surface, use the focus aid (MX-FA) to bring the sample into focus easily. Contact EVIDENT for attaching the focus aid.

NOTE
- **The focus aid is available only with the reflected light brightfield observation, reflected light differential interference contrast observation and reflected light simple polarization observation.**
- **When observing the sample with uneven surface or low reflectivity, the pattern of the graticule may not be projected with good contrast.**

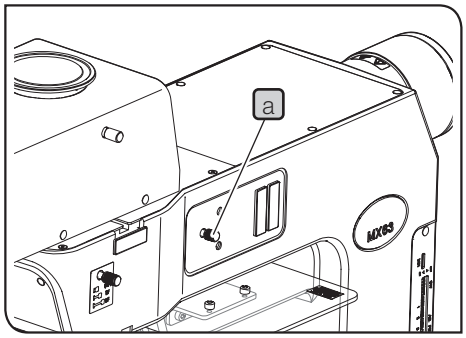

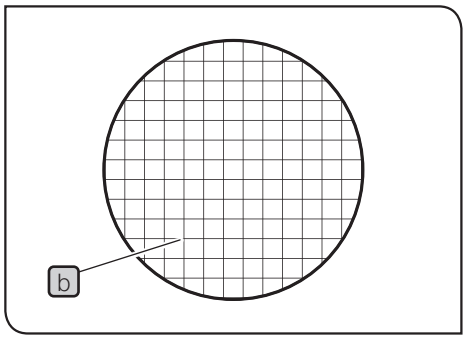

1. Press-in the focus aid knob a to insert the graticule in the light path.
2. While looking through the eyepieces, rotate the coarse focusing and fine focusing knobs to bring the sample into focus so that the lines b of the graticule are clearly visible.
3. Pull out the focus aid knob a.

NOTE **Be sure to remove the focus aid from the light path during observation.**

3-8 Adjusting the brightness

1 When the LED lamp housing is combined

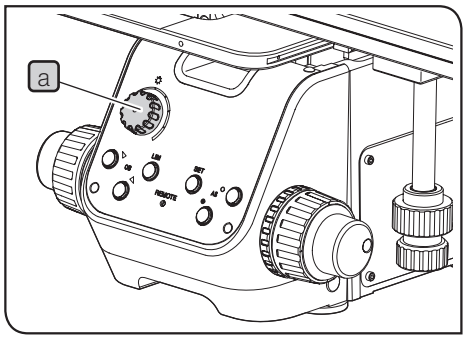

1 Rotate the light intensity knob a clockwise to make the illumination light brighter.

2 When the mercury lamp housing is combined

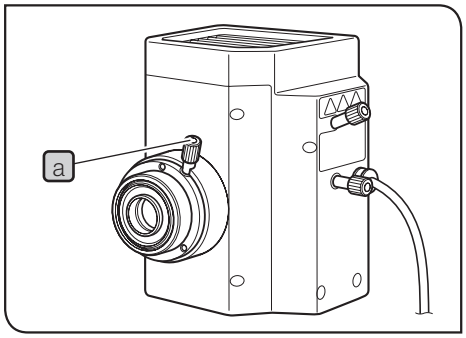

1 Adjust the collector lens focusing knob a to make the entire field of view brightest evenly.

TIP If the field of view is too bright, insert the ND filter (U-25ND50/ U-25ND25/ U-25ND6) to adjust the brightness. For details, see "3-11 Using the filter sliders for reflected light illumination" on page 39.

NOTE
- **Do not turn OFF the burner for two hours after turning it ON because the burner's lifetime will be shortened.**
- **When turning ON the mercury burner again, wait until the vapor of the mercury burner is cooled down and devolatilized. Wait approx. 10 minutes and turn it ON.**
- **If you open the lamp housing while the burner is turned ON, the system stops supplying the power for safety. In this case, set the main switch to O (OFF), wait 10 minutes or more and turn it ON. Be sure to wait until the lamp housing is sufficiently cooled down before opening the lamp housing.**

3 When the halogen lamp housing is combined

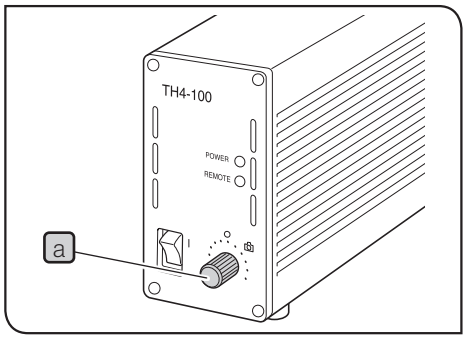

1 Rotate the brightness control knob a of the power supply for halogen bulb (TH4-100/TH4-200) clockwise to increase the brightness of the illumination.

TIP If you rotate the brightness control knob when the photography is set (mark position), the color temperature changes. If you change the brightness only without changing color temperature of the illumination, use the ND filter (U-25ND50/U-25ND25/ U-25ND6) to adjust the brightness. For details, see "3-11 Using the filter sliders for reflected light illumination" on page 39.

For details of the power supply for halogen bulb (TH4-100/TH4-200), refer to the instruction manual provided with the unit.

4 When the light source is combined

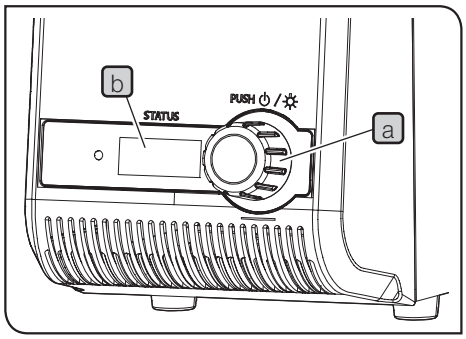

1 Rotate the light intensity adjustment dial a to adjust the light intensity.

TIP
- Rotating the light intensity adjustment dial a allows you to change the numerical characters (Min: 010, Max: 100) on the counter b in increments of 5.
- The larger the numerical characters on the counter b become, the brighter the lamp becomes.

For details of the LED and LDP light source (U-LGPS), refer to the instruction manual provided with the unit.

5 Using the LIM/SET switch

What is LIM function?

LIM stands for "Light Intensity Manager". By storing the arbitrary brightness per each objective or observation method in advance, this function sets the stored brightness automatically when the objective or the observation method is selected.

Procedure to store the brightness

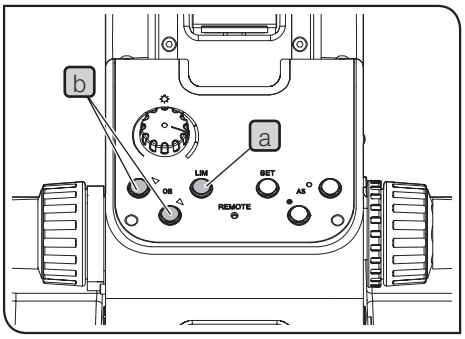

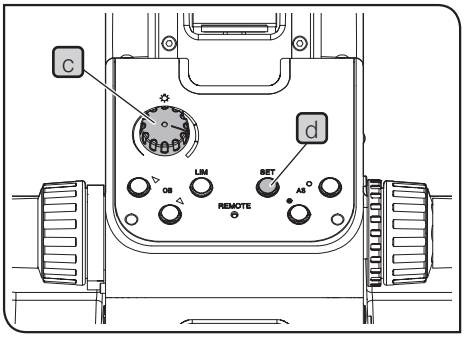

1 Press the LIM switch a to set the "Store" mode. (LIM switch a is OFF.)

2 Select the brightfield observation method. For procedures to select the observation method, see "3-3 Selecting the observation method (BF/DF)" on page 25.

3 Press the objective selection button on the front panel b to engage the objective with low magnification in the light path and bring the sample into focus.

4 Rotate the brightness control knob c to set the appropriate brightness easy to see.

5 Press the SET switch d to store the current brightness in the memory of this system.

6 Change the objective and preform 4 and 5. Store the appropriate brightness for all objectives attached.

7 Change the observation method and perform 3 to 6. Store the appropriate brightness for all observation methods which can be set.

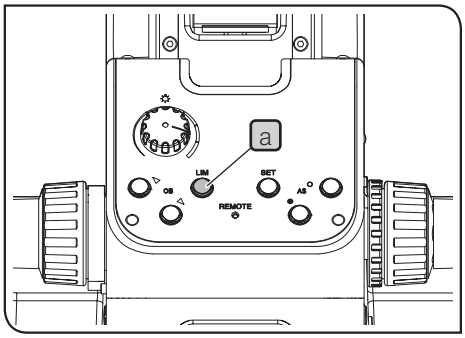

Procedure to replay the brightness

1 Press the LIM switch a to set the "Replay" mode. (LIM switch a is ON.)

2 When you select the desired objective or the observation method, the stored brightness is set automatically.

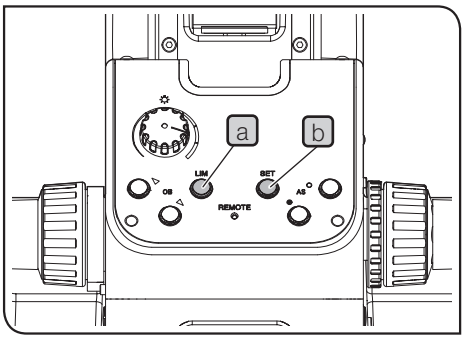

Restoring the stored brightness (LIM function) to the factory default setting

1 Set the main switch of the microscope frame to O (OFF).

2 Set the main switch of the microscope frame to I (ON) while pressing both the LIM switch a and the SET switch b. Keep pressing the LIM switch a and the SET switch b. The buzzer is heard three times after 5 seconds, and the stored brightness returns to the factory default setting.

TIP
- If you release the LIM switch and the SET switch within 5 seconds, the stored brightness (LIM function) does not return to the factory default setting and the microscope starts normally.
- The buzzer sound can be set to silent by setting the DIP switches. For setting procedures, see "Setting the DIP switch / AS.PRESET switch" (P.98).

3 Set the main switch of the microscope frame to O (OFF).

3-9 Adjusting the observation tube

1 Adjusting the interpupillary distance

The adjustment of the interpupillary distance is to adjust the distance between two eyepieces to fit to the distance between your two eyes. By doing so, you can see the single microscope image so that the fatigue of your eyes during observation can be reduced.

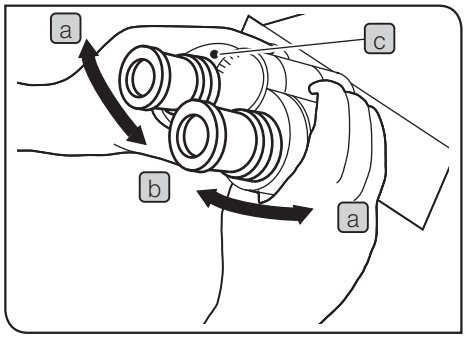

1. Align the right and left eyepieces horizontally.
2. While looking through the eyepieces, move the binocular section either in a or b direction until the right and left fields of view coincide completely. The value shown by the index c on binocular section represents your interpupillary distance.

TIP Note your interpupillary distance so that you can adjust it easily in the next observation.

2 Adjusting the diopter

The adjustment of the diopter is to correct the difference in the diopter by each observer.

When the eyepiece is not equipped with the eyepiece micrometer

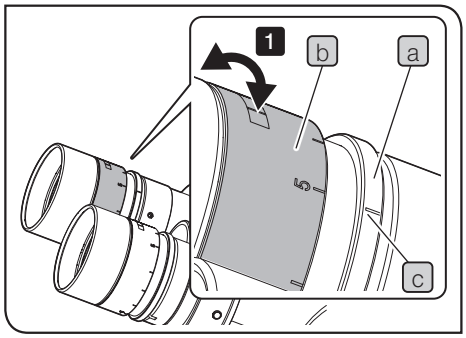

1. While pressing the lower part a of the eyepiece, rotate the diopter adjustment ring b to set the index c to ”0”. Perform this operation for right and left eyepieces.
2. Adjust the interpupillary distance.
3. Place the sample.
4. Engage the 10X objective in the light path and rotate the coarse/fine focusing knobs to bring the sample into focus.
5. Change to the 40X objective or higher and rotate the coarse/fine focusing knobs to bring the sample into focus.
6. Change to the 10X objective. While looking into the left eyepiece with your left eye, rotate the diopter adjustment ring b to bring the sample into focus. In the same manner, while looking into the right eyepiece with your right eye, rotate the diopter adjustment ring to bring the sample into focus.
7. Change to the 40X objective or higher again and rotate coarse/fine focusing knobs to bring the sample into focus.
8. Change to the 10X objective, and while looking through the right and left eyepieces, check that the sample is in focus.
9. If the sample is not in focus, repeat from 6 to 8 again.

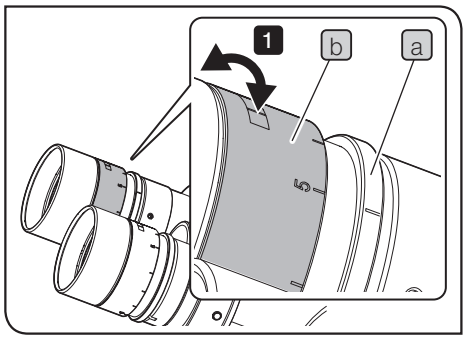

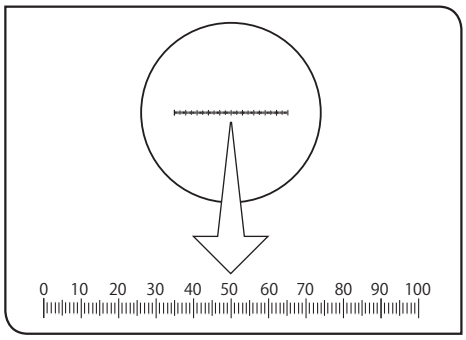

When the eyepiece is equipped with the eyepiece micrometer

1. While looking through the eyepiece equipped with the eyepiece micrometer, rotate the diopter adjustment ring b to adjust so that the scales or lines of the eyepiece micrometer in the field of view are clearly visible. When you rotate the diopter adjustment ring b, keep pressing the lower part a of the eyepiece.
2. Place the sample.
3. Engage the 10X objective in the light path. While looking through the eyepiece equipped with the eyepiece micrometer, rotate the coarse/fine focusing knobs to bring the sample into focus.
4. While looking through the eyepiece which is not equipped with the eyepiece micrometer, rotate the diopter adjustment ring b to bring the sample into focus.

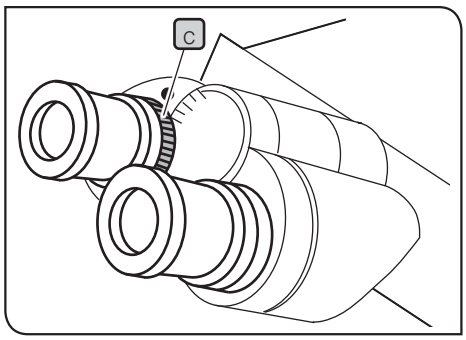

When the observation tube is equipped with the interpupillary distance adjustment ring c

Perform the same operation as described above.
Be sure to use the interpupillary distance adjustment ring c of the observation tube instead of the diopter adjustment ring b of the eyepiece described above.

3 Using the eye shades

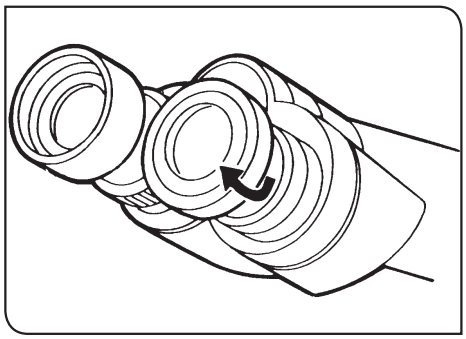

When wearing eyeglasses

Use the eye shades in the folded-down position.

When not wearing eyeglasses

Raising the folded-down eyeshades in the arrow direction prevents the unnecessary light from entering between eyepieces and eyes.

4 Adjusting the tilt

This function is available when U-TBI-3, U-TTR-2, MX-SWETTR or U-SWETTR-5 is combined.

You can adjust the eyepieces to an easy-to-see height and angle so that you can observe with a comfortable posture.

Observation tube	Adjustable angle
U-TBI-3	5° to 35°
U-TTR-2	5° to 35°
MX-SWETTR	0° to 42°
U-SWETTR-5	0° to 35°

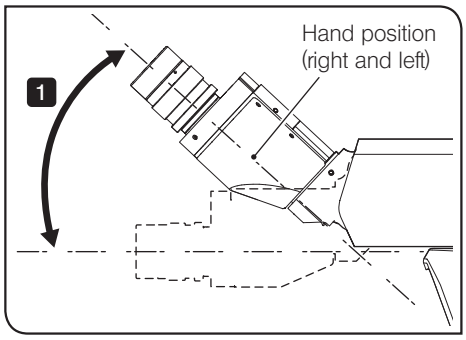

The picture shows the hand position when adjusting the tilt of MX-SWETTR. (Same for other observation tubes.)

1 Hold the binocular section and move it vertically to set to the desired position.

NOTE
- **Be careful, if you apply the excessive force to the binocular section from the upper or lower limit stop position, the system may be damaged.**
- **When storing the microscope, keep the eyepieces raised up in order to prevent the eyepieces from falling.**
- **The intermediate attachment is not available with U-TBI-3.**
- **If you observe scratches or dirt on the mirror surface in the darkfield observation with U-TBI-3, ghosts may appear in some cases.**

3-10 Adjusting the aperture diaphragm

The aperture diaphragm is used to adjust the numerical aperture of the illumination system. Matching the numerical aperture of the illumination system with that of the objective to be used offers an image with optimum contrast and also increases the focal depth of image. However, this adjustment may decrease the resolution and brightness.
In general, adjusting the numerical aperture to 70% to 80% of that of the objective allows you to obtain a well-balanced image.

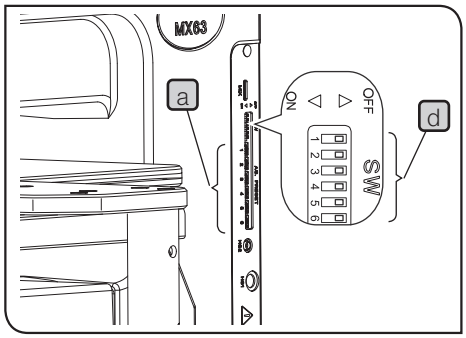

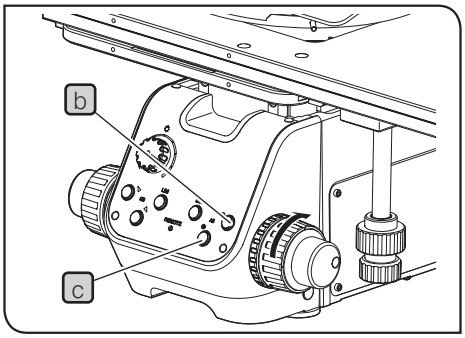

TIP
- During brightfield (BF) observation, the aperture diaphragm is set per each objective automatically according to the setting of the AS.PRESET switch a. For setting procedures, see "Setting the AS.(aperture diaphragm) PRESET switch" (P.99).
- During darkfield (DF) observation, the aperture diaphragm is set to the OPEN position automatically. (The aperture diaphragm open/close buttons b and c on the front panel are used for fine adjustment during BF observation.)

1 If you keep pressing the aperture diaphragm open/close button b or c, the aperture diaphragm opens or close at a constant speed. If you release your finger from the button, the aperture diaphragm is set at the current position.

Checking the setting status

The current setting can be confirmed by ON or OFF of the aperture diaphragm open/close buttons on the front panel.

(○: ON, ●: OFF)

Front panel	Setting status
AS ○ ○ ○	Same as the AS PRESET value (No button operation)
AS ○ ○ ●	Larger than the AS PRESET value
AS ○ ● ○	Larger than the AS PRESET value

TIP
- As the aperture diaphragm value fine-adjusted here is not stored, it will be returned to the setting value automatically when the objective is changed.
- To prevent the malfunction of the aperture diaphragm open/close buttons, use DIP switches d of the microscope frame to disable the function.
  For setting procedures, see "Setting the DIP switch / AS.PRESET switch" (P.98).

3-11 Using the filter sliders for reflected light illumination

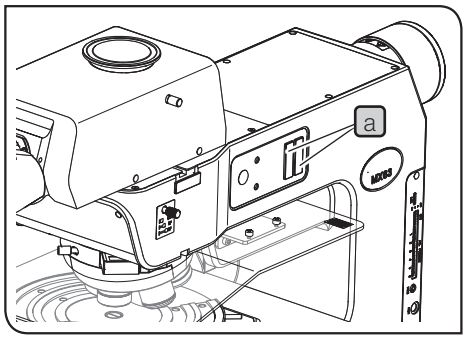

1 Insert the filter slider suitable for the intended observation into the filter insertion slot (2 positions) a to engage in the light path.
The first level (position where the clicking sound is heard first) is an empty hole. The filter is engaged in the light path at the second level (position where the clicking sound is heard next).

Filter slider position	Light path
First level (pulled out)	Empty hole
Second level (pressed in)	Filter

NOTE
- **Make sure that the filter display surface is visible from the front. If the filter is inserted in the direction where its display surface is not visible, the filter may be cracked.**
- **IF using the filters by engaging two filter sliders in the light path, turn one of the filter sliders upside down.Mounting filters in tilted in the diffferent direction prevents the flare.**

Filter to use	Filter slider	Filter for U-25*	Purpose
Color temperature conversion filter	U-25LBD	30.5S-LBD	Converts the illumination light of the halogen bulb to the daylight color.
	U-25LBA		Converts the illumination light of LED to the illumination color of the halogen bulb.
Green filter	U-25IF550		Increases the contrast of the observed monochromic image. Use when taking monochromic photographs.
Yellow filter	U-25Y48		Contrast filter for semiconductor wafer observation
Light intensity adjustment filter	U-25ND50		Adjusts the brightness of the light source. (Transmittance: 50%)
	U-25ND25	25ND25	Adjusts the brightness of the light source. (Transmittance: 25%)
	U-25ND6	25ND6	Adjusts the brightness of the light source. (Transmittance: 6%)
Frost filter	U-25FR		The light intensity decreases, but the even illumination can be obtained.
UV cut filter	U-25L42		Cuts the ultraviolet ray to prevent the tarnish on the polarizer caused by the mercury lamp housing.
Band-pass filters for IR	U-BP1100IR		Transmits only the wavelengths around 1100 nm.
	U-BP1200IR		Transmits only the wavelengths around 1200 nm.

*U-25 is available in combination with arbitrary filters.

3-12 Setting the glare prevention

When using the LED illumination, it is designed to turn OFF the LED illumination only when changing objectives in order to prevent the glare during objective change.

When using the halogen bulb, you can set the aperture diaphragm to the CLOSE position during objective change to prevent the glare. However, the speed to change objectives drops slightly comparing to the case when this function is not set. For setting procedures, see “Setting the DIP switch / AS.PRESET switch” (P.98).

3-13 Observation using the mercury burner

1 Turning ON the power supply for mercury burner

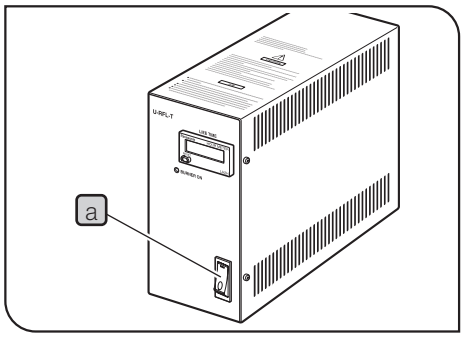

1. Set the main switch a to I (ON). For details, refer to the instruction manual provided with the unit.

2 Adjusting the brightness

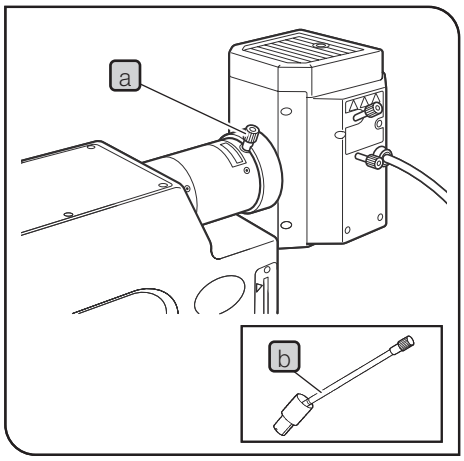

1. Slide the observation light path selection knob to select the BF light path.
2. Bring the sample into focus.
3. Adjust the collector lens focusing knob a to make the entire field of view brightest evenly. If the brightness is uneven, perform the centering according to “Centering the mercury lamp housing” (P.73)

TIP If it is difficult to use the collector lens focusing knob, insert the extension handle U-CLA b in the knob.

3 Inserting the ND filter

If the observation light is too bright, insert the ND filter to reduce the light. For details, see “3-11 Using the filter sliders for reflected light illumination” on page 39.

⚠CAUTION **If the mercury burner is kept turning ON for long hours while the filter is inserted, the filter and its metal frame will be heated. Be careful not to burn yourself.**
Do not leave the filter for a long time at locations other than the click position.

26ND0.5 (Transmittance: 0.5%) filter

If you perform the fluorescence observation using the mercury lamp housing, engage this filter in the BF observation light path. In such a case, insert this filter in the BF light path to prevent your eyes from bright light. This filter is provided with the adapter (MX-HGAD). Contact EVIDENT for attaching the filter.

3-14 Using the oil immersion objective

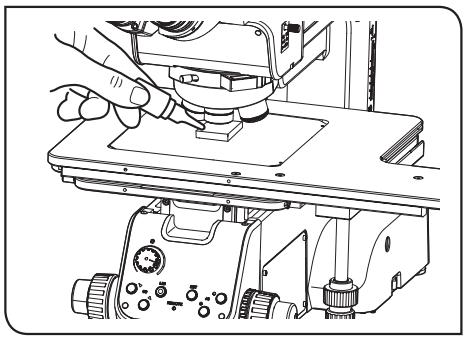

Apply the specified oil (immersion oil) to the tip of the oil immersion objective. Otherwise, the observation image can not be brought into focus.

NOTE **Always use the immersion oil made by EVIDENT. If you use the immersion oil other than those made by EVIDENT, the correct optical performance cannot be exhibited.**

1. Apply a drop of immersion oil on the sample.
2. Engage the oil immersion objective.
3. Rotate the coarse / fine focusing knobs to bring the sample into focus.

NOTE
- **If bubbles are contained in the oil, the visibility of the image is deteriorated. Check that the bubbles are not contained in the immersion oil.**
- **To check the presence of bubbles, remove the eyepiece, open the field diaphragm and the aperture diaphragm completely and look at the objective pupil in the observation tube.**
- **Remove bubbles by moving the sample or the stage up/down/right/left. Depending on the sample, the immersion oil may be adhered to the sample and bubbles may not be removed easily.**

4. After use, lower the stage and rotate the revolving nosepiece, and remove the objective attached with oil from the specimen.
5. Wipe off the immersion oil thoroughly from the tip of the objective and the tip of the condenser lens with the cleaning paper or the gauze slightly moistened with absolute alcohol. Wipe off the immersion oil from the specimen in the same procedures.

NOTE **If lenses or samples are left keeping the immersion oil attached, the immersion oil adheres and the correct observation may not be performed.**

⚠CAUTION **Follow the cautions indicated in the label of the immersion oil.**

4 Image acquisition

4-1 Image acquisition diagram

Attaching the camera adapter and the microscope digital camera to the trinocular tube allows you to acquire the observed image. The image acquisition range is determined by the size of the image sensor used in the camera and the magnification of the camera adapter.
For details, refer to the instruction manual for the camera and the camera adapter.

NOTE **When using the camera adapter, be sure to adjust the parfocality of the camera adapter and eyepieces. Otherwise, the focusing of the image through eyepieces will not match with that of the image acquired by the camera.**
For procedures to adjust the parfocality, refer to the instruction manual of the respective camera adapter.

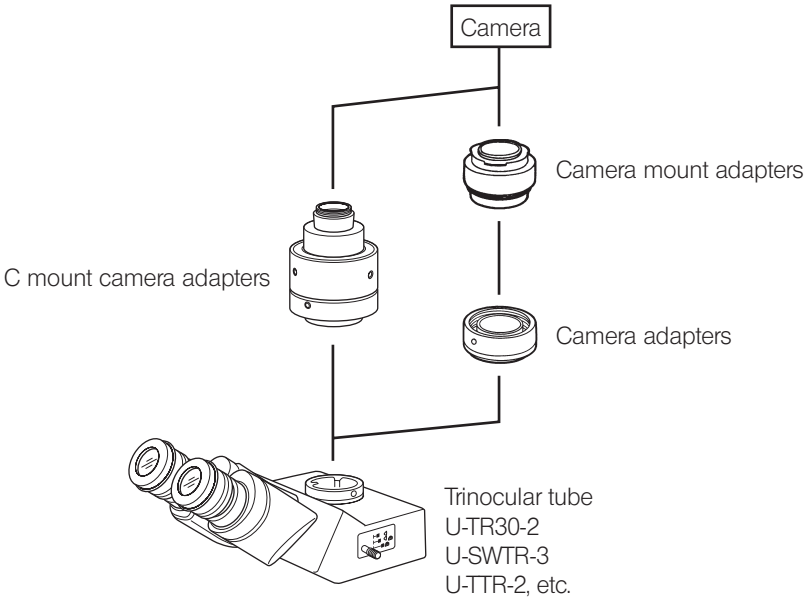

5 Observation methods

The dummy slider in the DIC prism insertion slot is effective for preventing flare in observations other than the DIC observation. It is, therefore, recommended to leave it mounted in any observation method.

TIP Setting the DF light path prevents the half mirror from entering the transmitted light illumination light path. Therefore, the transmitted light can be used most effectively.

5-1 Transmitted light brightfield observation procedures

	Operation part	Page
1 Set the main switch of the microscope frame to ▌(ON) and set the light intensity knob to the low voltage position.	Main switch	P.46
	Light intensity knob	P.46
2 Set the observation light path selection knob to the DF (reflected light darkfield) position.	Observation light path selection knob	P.25
(Can be set to the BF position if there is sufficient brightness)		
3 [Trinocular tube only] Push in the light path selection knob.	Light path selection knob	P.26
4 Remove the analyzer and the polarizer from the light path.		
5 Set the main switch of the light source to ▌(ON).	Main switch	P.46
6 Place a sample for observation on the stage.	X-axis/Y-axis knobs	P.27
7 Engage the 5X or 10X objective in the light path using the objective selection button and bring the sample into focus.	Objective selection button	P.28
	Coarse focusing knob / Fine focusing knob	P.29
8 Adjust the brightness.	Light intensity volume knob	P.46
9 Adjust the interpupillary distance.	Interpupillary distance adjustment scale	P.35
10 Adjust the diopter.	Diopter adjustment ring	P.35
11 Engage the objective with the magnificati on to be used in the light path and bring the sample into focus.	Objective selection button	P.28
12 Adjust the brightness.	Light intensity volume knob	P.46
13 Insert the required filters.	Filter insertion slot	P.49
14 Adjust the field diaphragm and aperture diaphragm.	Field diaphragm lever (MX-TILLB)	P.47
	Condenser height adjustment ring (MX-TILLB)	P.47
	Aperture diaphragm lever or aperture diaphragm ring	P.48
Observation		

Use the stage MX-SIC1412R2 or MX-SIC8R that is applicable for transmitted light observation.

The transmitted light illumination range of the applicable stage is described below.

MX-SIC1412R2*	X: 356 mm Y: 284 mm
MX-SIC8R	X: 189 mm Y: 189 mm

* When the transmitted light illumination unit (MX-TILLA) is used, it is required to attach a stopper that limits the Y-axis stroke to 261 mm because the condenser is protruded. For details, see "Attaching the Y-stroke limit stopper" on page 89.

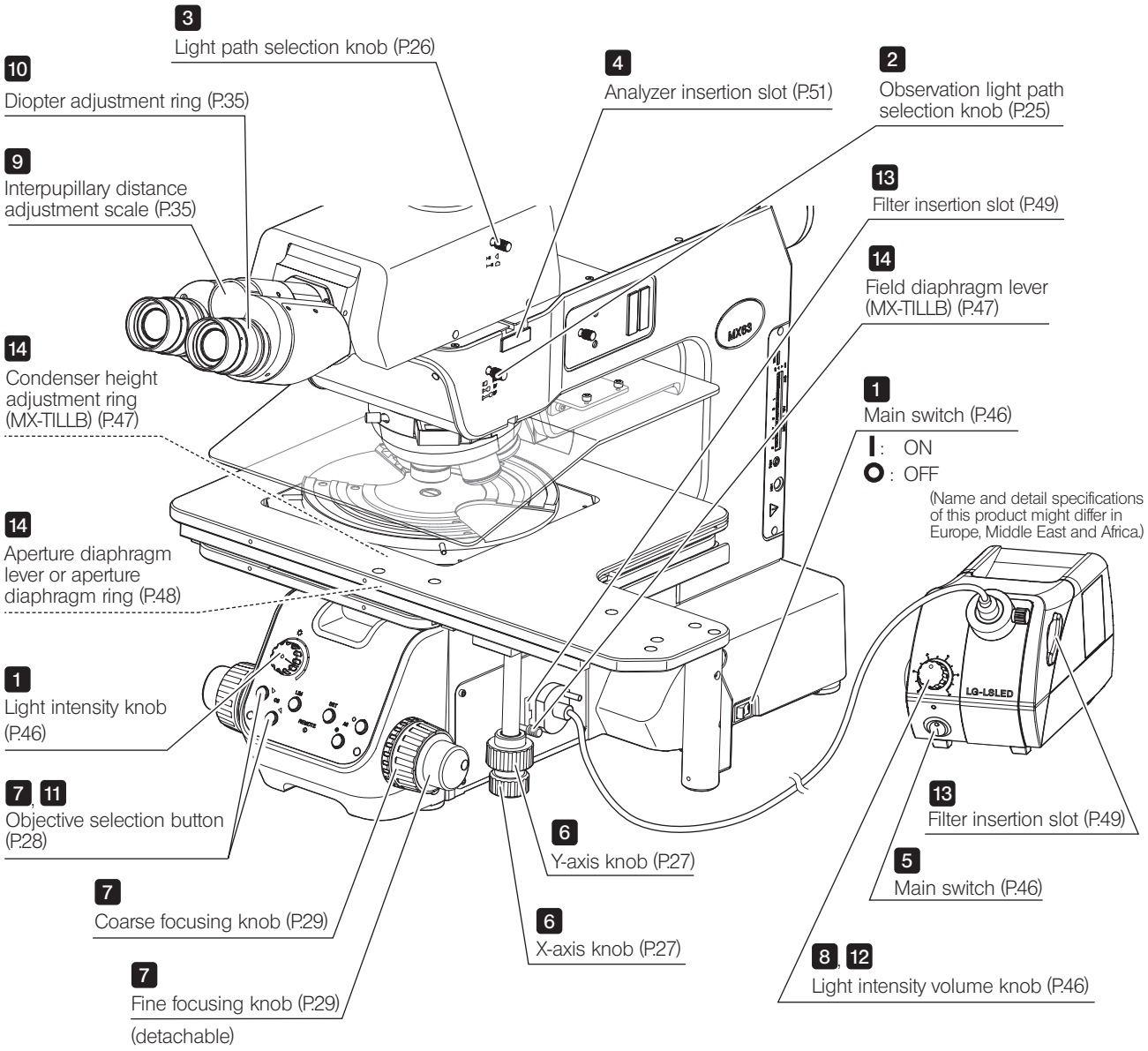

TIP Make a copy of this flow chart and diagram, and place it near the microscope so that you can use it when operating the microscope.

1 Notes for observation

- The objectives should be between 5X and 150X.
- The thickness of the observable sample should be between 0 and 9 mm (MX-TILLB) or between 0 and 3 mm (MX-TILLA) including the thickness 6 mm of the glass plate (BH3-SPG6, MX-SPG1412).
- If the glass thickness exceeds the above mentioned range, the image becomes dark due to insufficient NA of the illumination. If the objective below 5X is used, insufficiency in the illumination field or in the peripheral light intensity may result.
- If using the objective with higher NA than NA of the condenser (MX-TILLB: 0.6 or MX-TILLA: 0.5), the image becomes dark due to insufficient NA.

2 Adjusting the transmitted light illumination

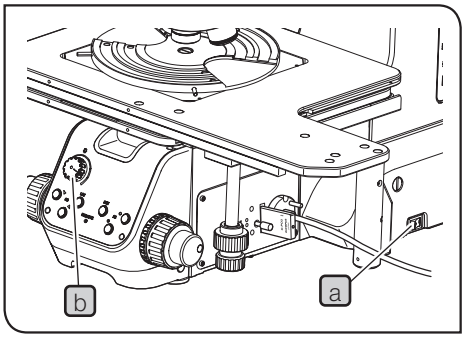

1 Set the main switch a of the microscope frame to I (ON), and rotate the light intensity knob b counterclockwise completely.

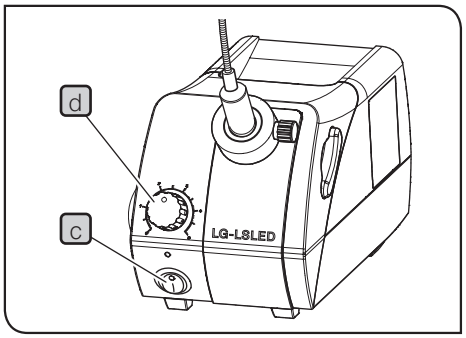

Name and detail specifications of this product might differ in Europe, Middle East and Africa.

2 Set the main switch c of the LED light source for light guide (LG-LSLED) to I (ON), and adjust the brightness using the light intensity volume knob d.

TIP Rotate the light intensity adjustment knob d clockwise (toward the scale 5) to increase the brightness or rotate it counterclockwise (toward the scale 0) to decrease the brightness. For details, refer to the instruction manual provided with the LED light source for light guide (LG-LSLED).

3 Using the field diaphragm for transmitted light illumination

This function is available only with the transmitted light illumination unit (MX-TILLB).

TIP Adjusting the field diaphragm appropriately offers the observed images with better contrast and few flare. This function is available with objectives between 5X and 150X.

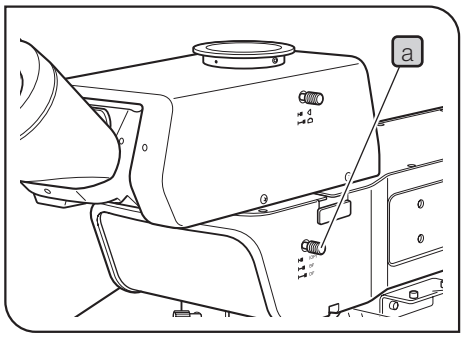

1. Set the observation light path selection knob a to the DF position.
2. Rotate the revolving nosepiece to engage the 5X or 10X objective in the light path and bring the sample into focus.
3. Look into eyepieces and pull out the field diaphragm lever b to narrow down the field diaphragm to a certain degree.
4. Rotate the condenser height adjustment ring c (clockwise to move the condenser up and counterclockwise to down) to bring the field diaphragm image into focus.

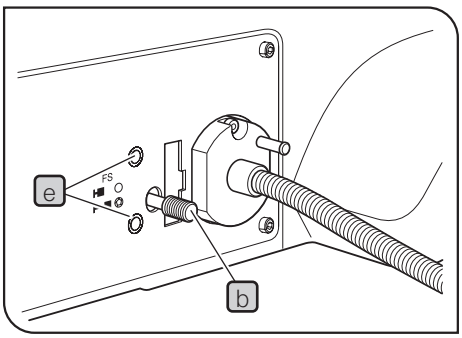

TIP If it is difficult to rotate the condenser height adjustment ring c, insert the the Allen screwdriver d into the groove of the condenser height adjustment ring c and move like a lever.

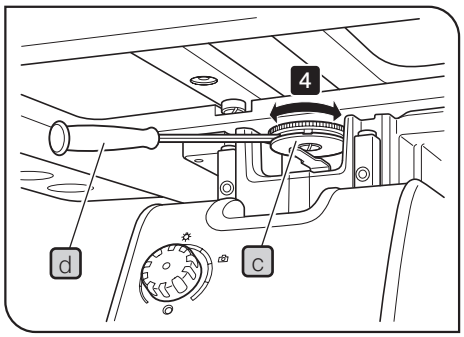

5. If the center of the field diaphragm is deviated from the center of the field of view, adjust the centering by inserting the Allen screwdriver into the field diaphragm centering screws e and rotating them alternately.
6. After the centering is adjusted, open the field diaphragm until the field diaphragm image becomes slightly larger than the field of view. This operation is required per each objective. However, as the field diaphragm image is not visible when using the 40X or higher objective, the field diaphragm should be minimized.

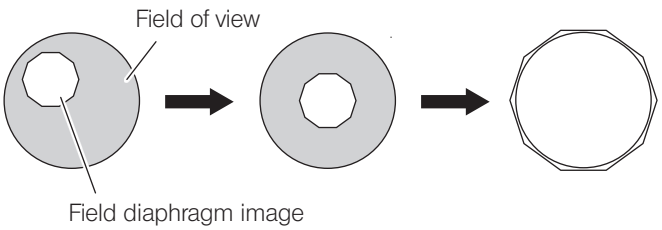

4 Using the aperture diaphragm for transmitted light illumination

In general, adjusting the aperture diaphragm to 70% to 80% of the numerical aperture of the objective allows you to obtain an image with good contrast. However, the NA may become insufficient when using the objectives with NA0.6 (MX-TILLB) or NA0.5 (MX-TILLA) or higher.

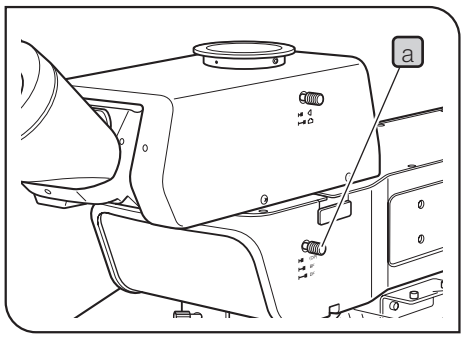

1. Set the observation light path selection knob a to the DF position.
2. Rotate the revolving nosepiece to engage the 10X objective in the light path and bring the sample into focus.

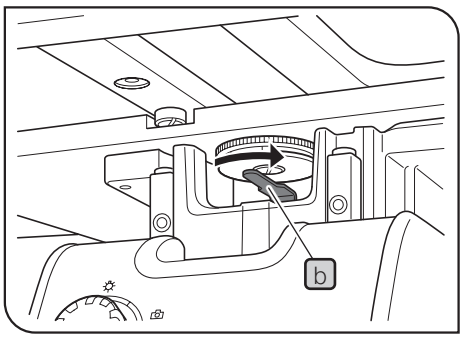

3. Pull out the eyepiece. While looking into the eyepiece sleeve, rotate the aperture diaphragm lever b toward right side. (At this time, narrowing down the aperture diaphragm to 70% to 80% allows you to obtain the image with good contrast.)

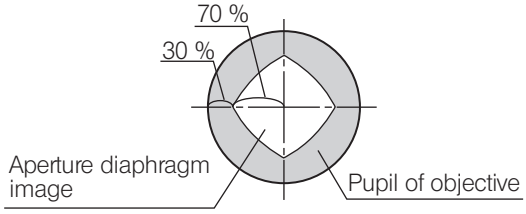

TIP Depending on the sample you observe, the contrast may be improved by narrowing down the aperture diaphragm furthermore. However, if the aperture diaphragm is narrowed down excessively with the low magnification objective, the illumination unevenness may occur in observed images or photographs.

4. Attach the eyepiece to the original position.

Reflected light observation of the sample

- When observing a transparent sample, such as a glass substrate, etc. using the 20X or lower objective, the annular flare may be observed. In this case, rotate the aperture diaphragm lever b (or aperture diaphragm ring) in arrow direction to narrow down to the minimum to eliminate the flares.
- When not using the transmitted light:
  MX-TILLB: Narrow down the aperture diaphragm to minimum.
  MX-TILLA: Push in the anti-reflection shutter.

5 Using the filters for transmitted light illumination

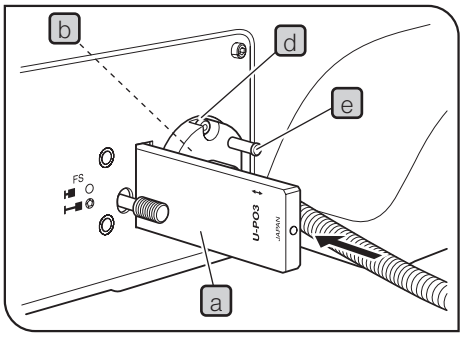

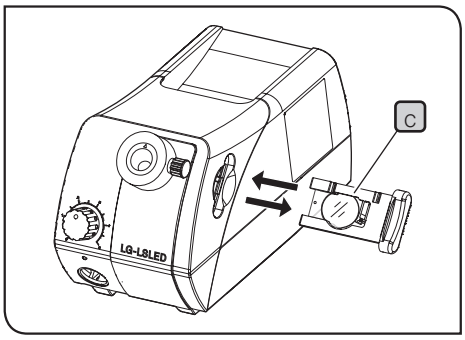

Name and detail specifications of this product might differ in Europe, Middle East and Africa.

Filters can be inserted to three positions described below.
Note, as the filter at the tip of the light guide is a built-in type, it is recommended to attach the constantly-used color temperature conversion filter 25LBD (for converting the illumination light to the daylight color).

Filter insertion slot a (one filter):

A filter same as the filter for reflected light illumination and the polarizer (U-PO3) can be inserted.

Tip of light guide b (one filter):

25LBD-IF, 25ND6 or 25ND25 is attachable.

Inside the light source c (one filter):

LBA filter is attachable. For details, refer to the instruction manual provided with the light source (LG-LSLED).

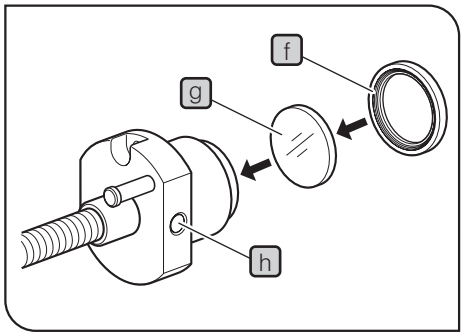

Attaching the filter at the tip of light guide

1. Loosen the clamping screw d of the light guide holder using the Allen screwdriver, and remove the light guide holder by holding the knob e.
2. Hold the filter holder f at the tip of the light guide with fingers and rotate the filter holder counterclockwise to remove it. Attach the required filter g and rotate the filter holder clockwise to secure it.
3. If you need to remove the light guide, loosen the clamping screw h.

5-2 Reflected light differential interference contrast (DIC) observation procedures

For this observation, the DIC mirror unit (U-MDIC3 or U-MDICAF3) must be attached to the OP position of the observation light path by EVIDENT.

U-MDIC3: The analyzer and the polarizer are built-in.

U-MDICAF3: As only the polarizer is built-in, the analyzer (U-AN360-3) must be inserted to adjust the crossed nicols.

NOTE **When using the mercury lamp housing, be sure to use the U-25L42 filter to prevent the polarizer from tarnish.**

	Operation part	Page
Set the main switch to I (ON).	Main switch	P.24
Push in the light path selection knob to the OP position and select the DIC observation light path.	Observation light path selection knob	P.25
[Trinocular tube only] Push in the light path selection knob.	Light path selection knob	P.26
Place a sample for observation on the stage.	X-axis/Y-axis knobs	P.27
Engage the 10X or 20X objective in the light path using the objective selection button and bring the sample into focus.	Objective selection button Coarse focusing knob / Fine focusing knob	P.28 P.29
Set the analyzer.	Analyzer insertion slot	P.51
Set the DIC slider.	DIC slider insertion slot	P.52
Adjust the brightness (illumination voltage).	Light intensity knob	P.32
Adjust the interpupillary distance. Adjust the diopter.	Interpupillary distance adjustment scale Diopter adjustment ring	P.35 P.35
Adjust the aperture diaphragm.	Aperture diaphragm open/close button	P.38
Engage the objective with the magnification to be used in the light path and bring the sample into focus.	Objective selection button Coarse focusing knob / Fine focusing knob	P.28 P.29
Adjust the brightness.	Light intensity knob	P.32
Adjust the prism of the DIC slider.	DIC slider	P.53
Observation		

1 Setting the analyzer (when using U-MDICAF3)

TIP When using the mirror unit (U-MDIC3), it is not necessary to set the analyzer or adjust the crossed nicols.

1. If the DIC slider is engaged in the light path, remove it from the light path. For details, see “Setting the DIC slider” (P.52).
2. Engage the 10X objective or 20X objective in the light path and bring the sample into focus approximately.
3. If the cover or the dummy slider is attached to the analyzer insertion slot a , remove it.
4. Insert the analyzer (U-AN360-3) b in the analyzer insertion slot a.

Analyzer insertion position	Light path
First level (pulled out)	Empty hole
Second level (pressed in)	Analyzer

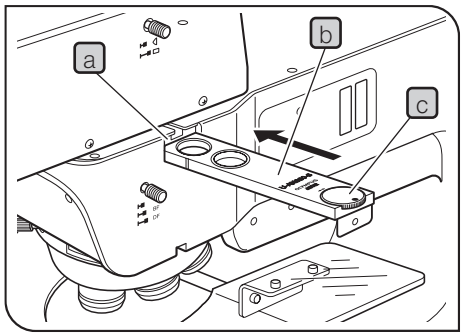

5. Rotate the analyzer rotation dial c to adjust the analyzer.

Observation with crossed nicols*:
Set the index of the dial to the position shown in the picture on the right.

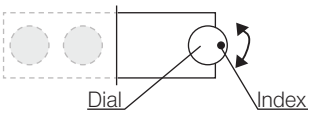

Observation without crossed nicols*:
Rotate the dial while looking at the observed image and align it with the position where the desired image is visible.

* The crossed nicols means the state that the field of view becomes the darkest.

TIP During DIC observation, the analyzer rotation dial must be set to the crossed nicols state.

2 Setting the DIC slider

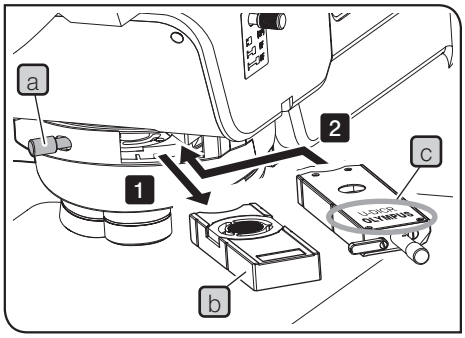

1 Loosen the mounting knob a at the rear right of the revolving nosepiece and pull out the dummy slider b.

2 Insert the DIC slider c for reflected light observation in the slider insertion slot of the revolving nosepiece with the display surface facing up, and stop inserting at the first level (when the clicking sound is heard at first).

DIC slider position	Light path
First level (pulled out)	OUT
Second level (pressed in)	IN

3 Tighten the mounting knob a to secure the slider.

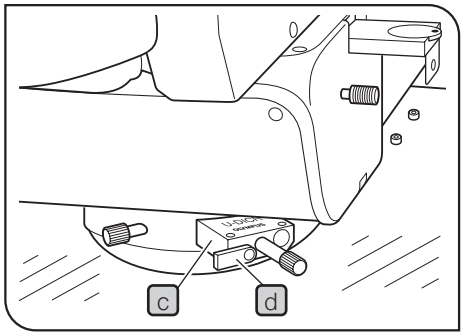

4 Only with the DIC slider U-DICR, slide the selection lever d depending on the objective in use.

Position of light path selection lever d	Applicable objectives	
Pressed in	UIS2	MPLFLN/MPLFLN-BD series MPLAPON series
	UIS	UMPlanFl/UMPlanFl-BD series MPlanApo20X, 100X MPlanApo100XBD
Pulled out	UIS2	LMPLFLN/LMPLFLN-BD series
	UIS	LMPlanFl/LMPlanFl-BD series LMPlanApo/LMPlanApo-BD series

With the U-DICRH or U-DICRHC without selection lever, the applicable objectives are as follows.

DIC slider c	Applicable objectives	
U-DICRHC	UIS2	MPLFLN/MPLFLN-BD series MPLAPON series
	UIS	UMPlanFl/UMPlanFl-BD series MPlanFl-BD series MPlanApo20X, 100X
U-DICRHC	UIS2	LMPLFLN/LMPLFLN-BD series
	UIS	LMPlanFl/LMPlanFl-BD series LMPlanApo/LMPlanApo-BD series

3 Adjusting the prism of the DIC slider

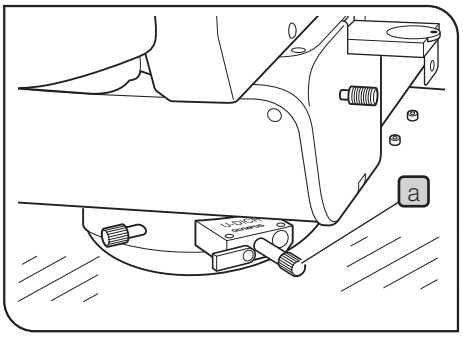

1 Rotate the prism movement knob a of the DIC slider to select the interference color with the highest contrast suitable for the sample.

U-DICR, U-DICRHC
The interference color of the background changes continuously from the gray sensitive color to the magenta sensitive color (from -100 to 600 nm).

U-DICRH
The interference color of the background changes continuously from -100 to 100 nm.

- If you select the gray color for the background color, you can observe the three dimensional image with high contrast in the gray sensitive color with the highest sensitivity.
- If you select the magenta sensitive color for the background color, even a small phase difference can be viewed as a variation of the color.

NOTE **The detection sensitivity during DIC observation is very high. Be careful, particularly, for dirt or dust on the sample surface.**

TIP
- As the detection sensitivity is directional, it is recommended to use a rotary wafer holder together or rotate the sample during observation.
- Narrowing down the aperture diaphragm appropriately may increase the contrast.

5-3 Reflected light simple polarization observation procedures

NOTE
- The performance of the polarizer may be deteriorated if it is exposed to the light for a long period (approx. 2000 hours continuously). If this happens, replace the polarizer.
- When using the mercury lamp housing, be sure to use the U-25L42 filter to prevent the polarizer from tarnish.

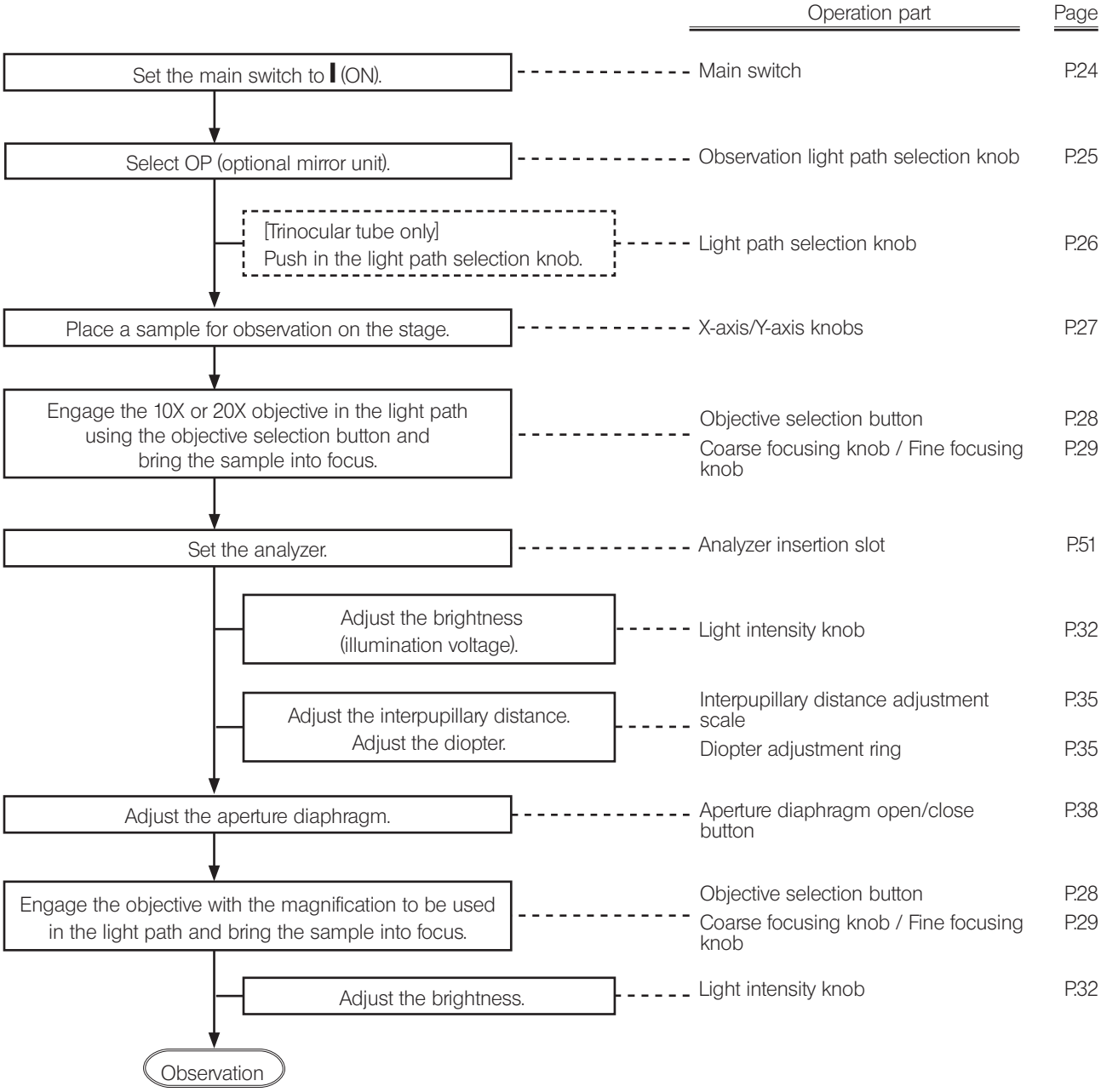

5-4 Reflected light fluorescence observation procedures

For this observation, the reflected light fluorescent mirror unit must be attached to the OP position of the observation light path by EVIDENT.

Attach the mercury lamp housing and perform the centering of the burner before observation. Set the AS PRESET switch of the objective in use to “1” with which the aperture diaphragm is fully opened. For details, see “Table 1 Recommended AS PRESET values” (P.100).

⚠CAUTION **When using the mercury lamp housing, the difference in light intensity between the fluorescence and brightfield observations is increased.**
To compensate this difference, insert the ND filter (26ND0.5) provided with the adapter (MX-HGAD) in the brightfield observation light path. (For attaching the mirror unit, contact EVIDENT.)

NOTE **If the observation light is too bright, insert the ND filter to reduce the light.**

	Operation part	Page
Set the main switch to ▌(ON).	Main switch	P.24
Select OP (optional mirror unit).	Observation light path selection knob	P.25
[Trinocular tube only] Push in the light path selection knob.	Light path selection knob	P.26
Place a sample for observation on the stage.	X-axis/Y-axis knobs	P.27
Engage the 5X or 10X objective in the light path using the objective selection button and bring the sample into focus.	Objective selection button	P.28
	Coarse focusing knob / Fine focusing knob	P.29
Adjust the brightness (illumination voltage).	Light intensity knob	P.32
Adjust the interpupillary distance. Adjust the diopter.	Interpupillary distance adjustment scale	P.35
	Diopter adjustment ring	P.35
Open the aperture diaphragm.	Aperture diaphragm open / close button	P.38
Engage the objective with the magnification to be used in the light path and bring the sample into focus.	Objective selection button	P.28
	Coarse focusing knob / Fine focusing knob	P.29
Adjust the brightness.	Light intensity knob	P.32
Insert the required filters.	Filter insertion slot	P.39
Observation		

5-5 Reflected light IR (infrared) observation procedures

Use the camera which matches the wavelength used with IR.

⚠CAUTION **The infrared light is harmful to your eyes. Be sure to observe the image on the TV monitor.**

To improve the IR observation effect, use as many IR-dedicated units as possible (such as the lamp housing, objective, observation tube, camera adapter, etc.). For IR-dedicated units, contact EVIDENT.

Notes for using the infrared

- The infrared light generates the significant heat on the sample surface. Pay a careful attention to the sample which is vulnerable to heat.
- When using the reflected light polarizer, engage the reflected light ND filter (U-25ND6) or the band-pass filter for reflected light infrared (U-BP1100IR or U-BP1200IR) in the light path on the light source side to prevent the polarizer from tarnish.
- With the trinocular observation tube (U-TR30IR), the middle position of the 3-level light path selection is used for the shutter.

	Operation part	Page
Set the main switch to ▌(ON).	Main switch	P.24
Select BF (reflected light brightfield observation).	Observation light path selection knob	P.25
Bring the sample top surface into focus with the visible wavelength.	Objective selection button Coarse focusing knob / Fine focusing knob	P.28 P.29
Insert the band-pass filters (U-BP1100IR, U-BP1200IR, U-25).	Filter insertion slot	P.39
Change to the camera light path.	Light path selection knob	P.26
Engage the objective with the magnification to be used in the light path and bring the sample into focus.	Objective selection button Coarse focusing knob / Fine focusing knob	P.28 P.29

Observation

5-6 Reflected light simultaneous observation for BF/DF observation procedures

	Operation part	Page
Set the main switch to ▌(ON).	Main switch	P.24
Select BF (reflected light brightfield observation).	Observation light path selection knob	P.25
[Trinocular tube only] Push in the light path selection knob.	Light path selection knob	P.26
Remove the analyzer, mirror unit, etc. from the light path.		
Place a sample for observation on the stage.	X-axis/Y-axis knobs	P.27
Use the objective selection button to engage the 5X or 10X objective in the light path and bring the sample into focus.	Objective selection button Coarse focusing knob / Fine focusing knob	P.28 P.29
Adjust the brightness (illumination voltage).	Light intensity knob	P.32
Adjust the interpupillary distance. Adjust the diopter.	Interpupillary distance adjustment scale Diopter adjustment ring	P.35 P.35
Engage the objective with the magnification to be used in the light path and bring the sample into focus.	Objective selection button Coarse focusing knob / Fine focusing knob	P.28 P.29
Adjust the brightness.	Light intensity knob	P.32
Insert the required filters.	Filter insertion slot	P.39
Use only for fine adjustment of aperture diaphragm during brightfield observation.	Aperture diaphragm open/close button	P.38
Insert the MIX slider for reflected light observation.	MIX slider for reflected light observation	P.58
Observation		

1 Inserting the MIX slider for reflected light observation

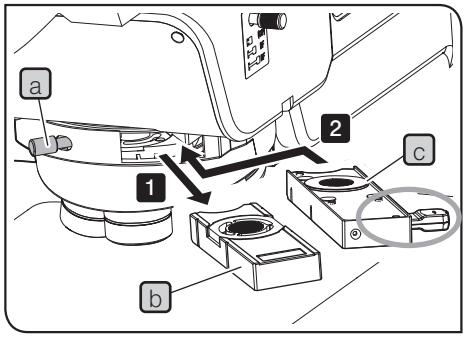

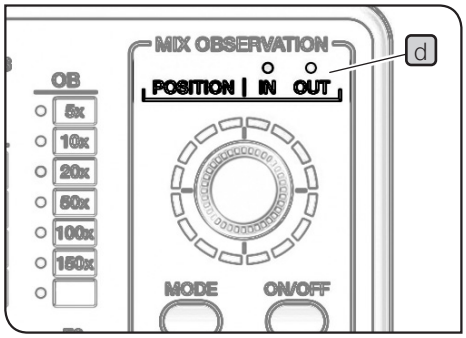

1. Loosen the mounting knob a at the rear right of the revolving nosepiece and pull out the dummy slider b.
2. Insert the MIX slider for reflected light observation (U-MIXR) c to the slider insertion slot of the revolving nosepiece so that the connector comes to the right side, and push it in the second level (position where the clicking sound is heard).

MIX slider for reflected light observation position	Light path
First level (pulled out)	OUT
Second level (pressed in)	IN

You can check the state whether the MIX slider for reflected light observation is engaged in or removed from the light path by the POSITION indicator d of the hand switch (BX3M-HS).

3. Tighten the mounting knob a to secure the slider.

2 Turning ON the illumination of the MIX slider for reflected light observation

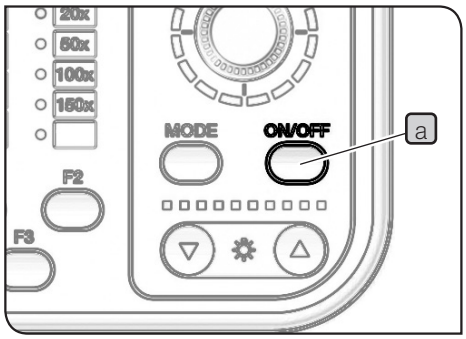

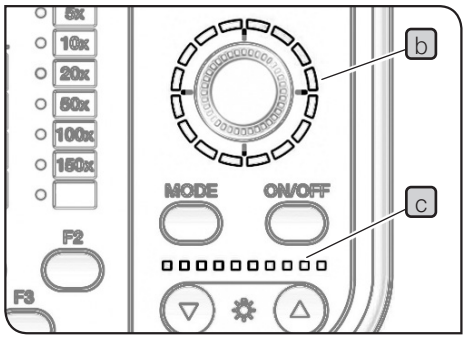

1. If you press the ON/OFF button a of the hand switch (BX3M-HS) to set it to ON, the illumination of the MIX slider for reflected light observation (U-MIXR) turns ON.

State	Indicator (b, c)	Function
ON	Turns ON.	The illumination turns ON.
OFF	Turns OFF.	The illumination turns OFF.

3 Adjusting the illumination brightness

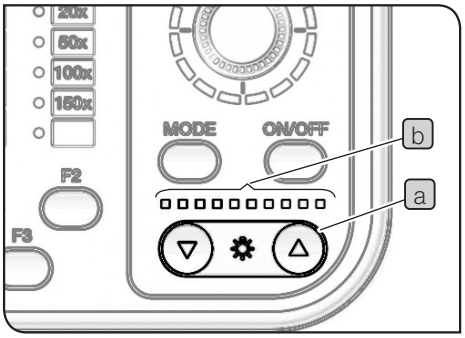

1 Press the light intensity button a of the hand switch (BX3M-HS) to adjust the brightness of the illumination.

Button	Operation	Function
▼	Short press	Darken by predetermined quantity.
	Long press	Darken continuously.
▲	Short press	Brighten by predetermined quantity.
	Long press	Brighten continuously.

Indicator

The light intensity state can be checked by the indicator b.

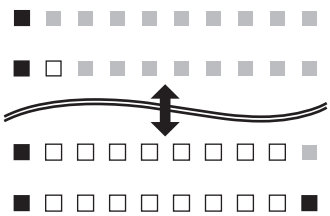

Brightness : OFF
(Light intensity value : 0%)

Brightness : Maximum
(Light intensity value : 100%)

■ : Turns ON in blue.
□ : Turns ON in white.
■ : Turns OFF.

4 Selecting the illumination pattern

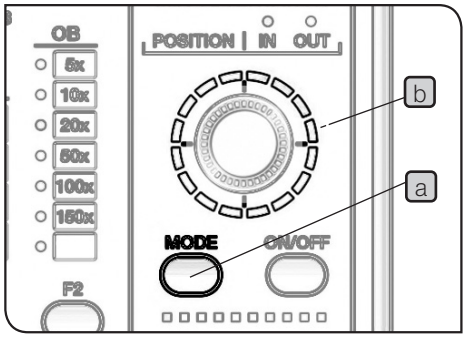

1 Press the MODE button a of the hand switch (BX3M-HS) to select the illumination pattern. The indicator b turns ON according to the illumination pattern.

State	Indicator (b, c)	Function
ON	Turns ON.	The illumination turns ON.
OFF	Turns OFF.	The illumination turns OFF.

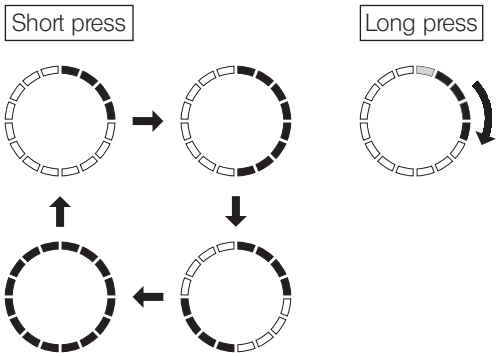

: The illumination turns ON and the indicator turns ON in blue.

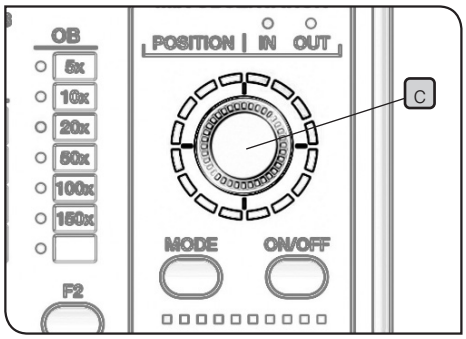

2 Rotate the dial c to change the illumination position. The illumination position shifts in the rotated direction by one scale at a time.

(Example of clockwise rotation)

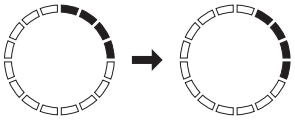

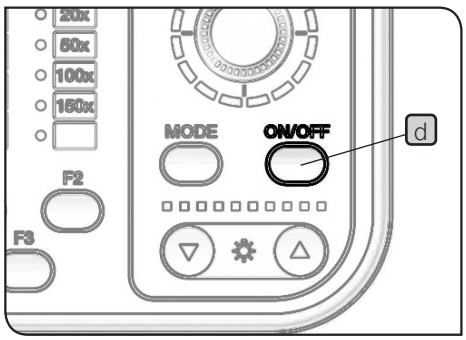

NOTE **While the illumination pattern is rotating automatically, you cannot operate the dial c and the ON/OFF button d.**

5-7 Transmitted light simple polarization observation procedures

TIP This observation requires the analyzer and the polarizer. However, if the mirror unit (U-MDICT3 or U-MDIC3) is engaged in the (OP) light path, the built-in analyzer can be used.

	Operation part	Page
Set the main switch of the microscope frame to ▌(ON) and set the light intensity knob to the low voltage position.	Main switch	P.46
	Light intensity knob	P.46
Set the observation light path selection knob to the DF (reflected light darkfield) position or the OP (optional mirror unit) position.	Observation light path selection knob	P.25
[Trinocular tube only] Push in the light path selection knob.	Light path selection knob	P.26
Set the main switch of the light source to ▌(ON).	Main switch	P.46
Set the analyzer and the polarizer.	Analyzer insertion slot	P.62
	Polarizer insertion slot	P.62
Place a sample for observation on the stage.	X-axis/Y-axis knobs	P.27
Engage the 5X or 10X objective in the light path using the objective selection button and bring the sample into focus.	Objective selection button	P.28
	Coarse focusing knob / Fine focusing knob	P.29
Adjust the brightness.	Light intensity volume knob	P.46
Adjust the interpupillary distance. Adjust the diopter.	Interpupillary distance adjustment scale	P.35
	Diopter adjustment ring	P.35
Engage the objective with the magnification to be used in the light path and bring the sample into focus.	Objective selection button	P.28
Adjust the brightness.	Light intensity volume knob	P.46
Insert the required filters.	Filter insertion slot	P.49

Observation

1 Setting the analyzer and the polarizer for transmitted light illumination

When (OP) is selected for observation light path

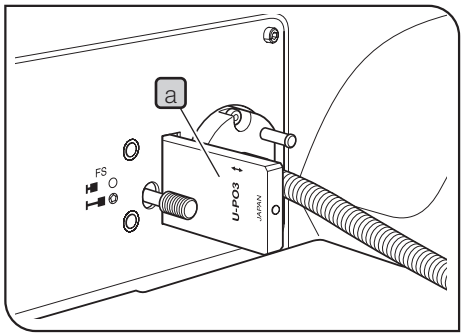

1 Insert the polarizer (U-PO3) a in the polarizer insertion slot.

Polarizer insertion position	Light path
First level (pulled out)	Empty hole
Second level (pressed in)	Polarizer

When DF is selected for observation light path

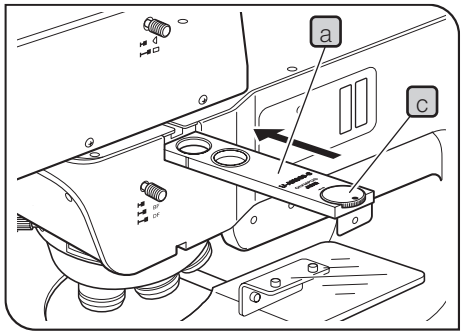

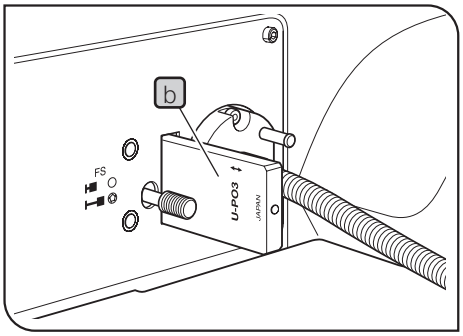

1 If the DIC slider is engaged in the light path, remove it from the light path.

2 Engage the 10X objective or 20X objective in the light path and bring the sample into focus approximately.

3 If the cover or the dummy slider is attached to the analyzer insertion slot or the polarizer insertion slot, remove it.

4 Insert the analyzer (U-AN360-3) a in the analyzer insertion slot.

Analyzer insertion position	Light path
First level (pulled out)	Empty hole
Second level (pressed in)	Analyzer

5 Rotate the analyzer rotation dial to set to 0°.

6 Insert the polarizer (U-PO3) b in the polarizer insertion slot.

Analyzer insertion position	Light path
First level (pulled out)	Empty hole
Second level (pressed in)	Polarizer

7 Rotate the analyzer rotation dial c so that the observation field of view becomes the darkest (crossed nicols).

6 Replacement of optical parts

6-1 Removing and attaching the eyepiece

1 Removing the eyepiece

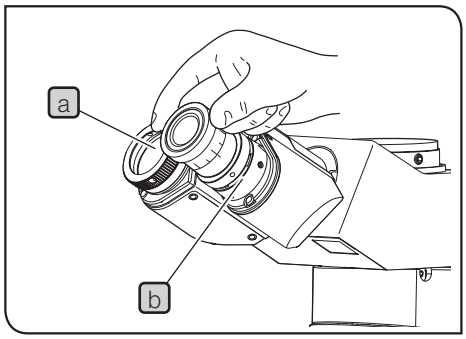

1 Pull out the eyepiece a from the eyepiece sleeve b.

2 Attaching the eyepiece micrometer

You can use the eyepiece micrometer to check the size of the observed image or the center position of the observation field of view, etc. For the eyepiece micrometer types attachable to your eyepiece, contact EVIDENT.

Attachable eyepiece micrometer
Size
Ø24 mm Thickness 1.5 mm

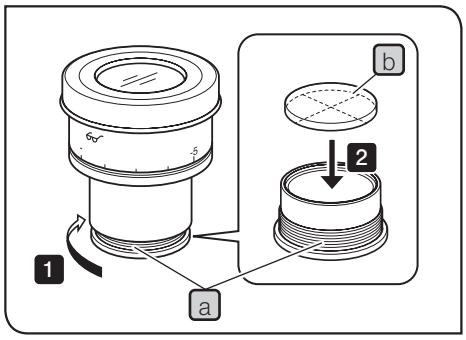

1 Hold the eyepiece frame, and rotate the built-in reticle holder a in the arrow direction to remove it.

TIP Depending on the case, the reticle holder may be tightened too firmly and it cannot be rotated. If you grab the reticle holder too firmly, it will be deformed and cannot be rotated furthermore. Grab around the reticle holder lightly with equal force to rotate or push it to the rubber sheet placed on the desk to rotate and remove it.

2 Insert the eyepiece micrometer b in the removed reticle holder a with the display surface of the eyepiece micrometer facing down.

3 Screw in the reticle holder a to the bottom of the eyepiece.

NOTE
- **Be careful not to touch the lens with your fingers during operation.**
- **Do not tighten the reticle holder with excess force.**

3 Attaching the eyepiece

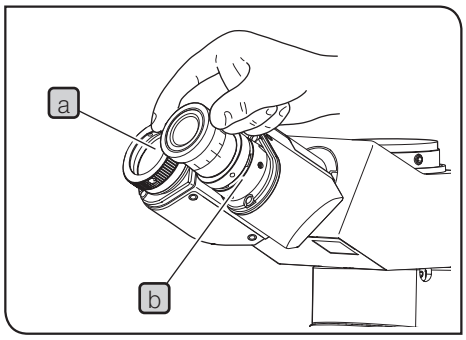

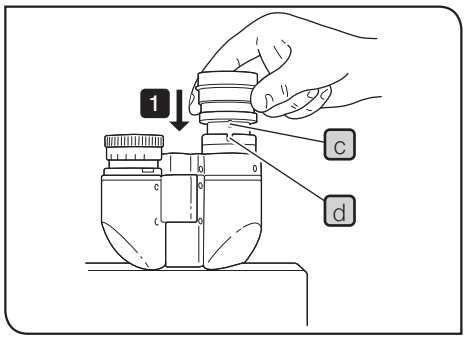

1 Insert the eyepiece a into the eyepiece sleeve b until it touches the end.

NOTE
- As the binocular tube does not have a positioning groove, it cannot be used with an eyepiece equipped with a positioning pin.
- When using the eyepiece equipped with the micrometer, insert the eyepiece into the right eyepiece sleeve. In this case, attach the eyepiece so that the eyepiece positioning pin c enters the groove d below the eyepiece sleeve.
- The super widefield eyepiece (SWH10X-H) has a positioning pin. Attach it by inserting the positioning pin to the positioning groove of the eyepiece sleeve.

6-2 Replacing the objective

NOTE When replacing the objective, remove the revolving nosepiece from the microscope frame before replacing the objective.
If you attach the objective without removing the revolving nosepiece, the objective will be screwed upward (direction opposite to gravity). So, it will be difficult to screw the objective fully into the revolving nosepiece to secure firmly. Also, since the screw hole is not visible, you may screw in the objective while the screw is not engaged properly, which may damage the screw.

1 Removing the revolving nosepiece

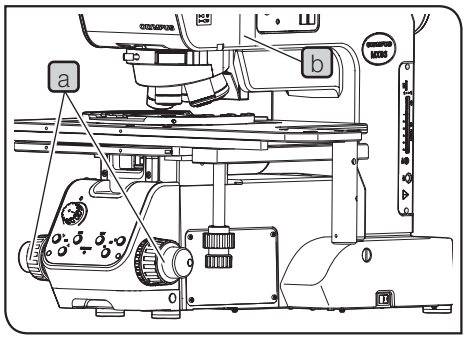

1. Set the main switch of the microscope frame to O (OFF).
2. Rotate the coarse focusing knob a to lower the stage sufficiently.
3. Loosen the revolving nosepiece clamping screw b using an Allen screwdriver.

NOTE If the clamping screw is loosened too much, the revolving nosepiece is caught with the clamping screw and it cannot be removed. And, if the clamping screw is loosened furthermore, the clamping screw may come off.

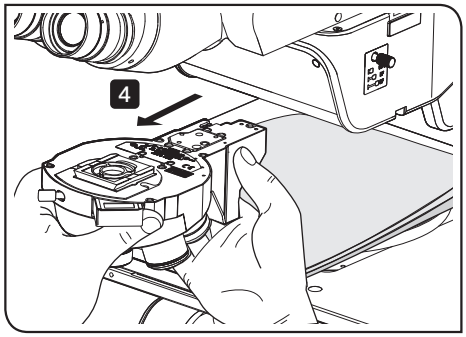

4. Pull out the revolving nosepiece from the microscope frame toward the front side.

NOTE The revolving nosepiece attached with objectives becomes heavier. It is recommended to put a soft cloth on the stage before removing the revolving nosepiece so that the objectives won't collide with the stage due to its own weight and get damaged.

2 Removing and attaching the objective

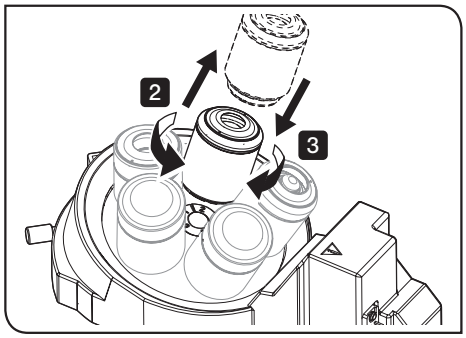

1 Place the revolving nosepiece on the desk with the objectives facing up.

2 Rotate the objective in the arrow direction to remove the objective from the revolving nosepiece.

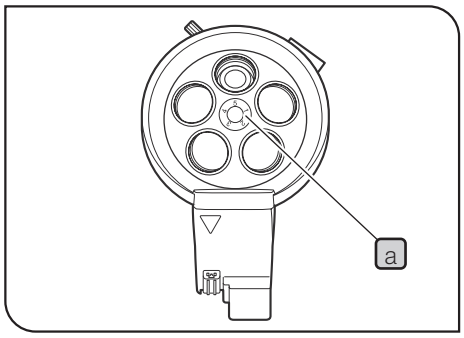

3 Attach the objective to the objective mounting screw a from No.1 to 5 or No. 1 to 6 in the order from low magnification to high magnification. Rotate the objective in arrow direction to screw in and secure it firmly.

NOTE **Never rotate the revolving nosepiece directly with hand. Otherwise, failure may result.**

TIP
- Remove the cap from each objective mount screw hole. Attach the caps to the unused objective mounting screw holes.
- The revolving nosepiece can be rotated smoothly by attaching the objectives uniformly. Therefore, the objectives that are not used frequently should also be attached.

Using the brightfield objective adapter

When attaching a brightfield objective to the revolving nosepiece for brightfield/darkfield observations, attach the objective over the objective adapter (BD-M-AD).

When the hand switch is combined

Attach the indicator sheet that corresponds to the magnification of the objective attached to the objective mounting screw No. a to the indicator of the hand switch (BX3M-HS).

3 Attaching the revolving nosepiece

NOTE **Only U-D5BDREMC, U-D6REMC, U-P5REMC, U-P5BDREMC and U-D6BDREMC are available with this microscope.**

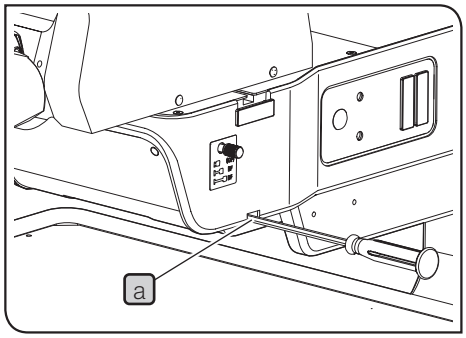

1 Rotate the coarse focusing knob to lower the stage sufficiently.

2 Loosen the revolving nosepiece clamping screw a using the Allen screwdriver provided with microscope frame.

NOTE **If the clamping screw is loosened too much, the revolving nosepiece is caught with the clamping screw and it cannot be attached. And, if the clamping screw is loosened furthermore, the clamping screw may come off.**

If 1 and 2 in "Removing the revolving nosepiece" (P.65) are performed, 1 and 2 are not necessary.

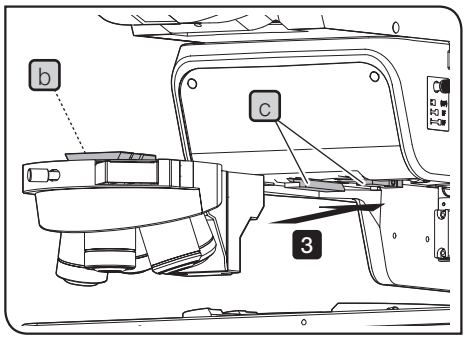

3 Insert the revolving nosepiece from the front side by aligning the slide dovetail b of the revolving nosepiece with the nosepiece mount dovetail c of the microscope frame, and push it until it touches the end.

NOTE
- **When attaching the revolving nosepiece, lower the stage sufficiently so that objectives do not touch the stage.**
- **Push in the revolving nosepiece mount dovetail completely until it touches the end. If the clamping screw is tightened without inserting the revolving nosepiece completely, the mount section may be deformed and the revolving nosepiece cannot be attached or removed. Also, the connection failure of the connector may occur.**
- **The revolving nosepiece is heavy. Attach it carefully not to drop it.**

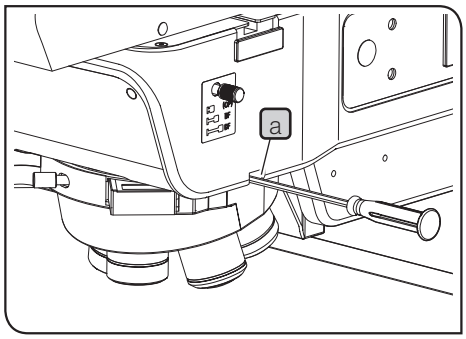

4 While pushing the revolving nosepiece in the attaching direction with your left hand, hold the Allen screwdriver between the pointing finger and the thumb and tighten the revolving nosepiece clamping screw a to secure the revolving nosepiece.

5 Set the DIP switches of the attached revolving nosepiece when all assemblies are completed. For setting procedures, see "Setting the DIP switch / AS.PRESET switch" (P.98).

6-3 Replacing the halogen bulb

⚠CAUTION **The bulb, lamp housing and areas around the lamp housing are extremely hot during and right after use. When replacing the burner during observation, set the main switch to ○ (OFF) and disconnect the power cord. Wait until the bulb, the lamp housing and areas around the lamp housing are sufficiently cooled down.**

Applicable lamp	12V100WHAL-L (made by PHILIPS Co. 7724I) 12V100WHAL (made by PHILIPS Co. 7023)

1 Removing the halogen lamp housing

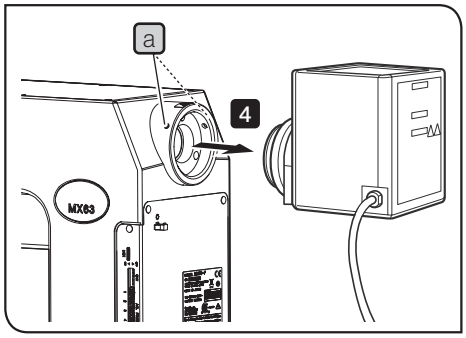

1. Set the main switch of the power supply for halogen bulb (TH4-100/TH4-200) to ○ (OFF) and disconnect the power cord.
2. Remove the connector of the lamp housing from the power supply (TH4-100/TH4-200).
3. Loosen the mounting screws a (2 positions) using the Allen screwdriver provided with microscope frame.

NOTE **Be careful, if the mounting screw is loosened too much, it may come off.**

4. Remove the lamp housing.

For details of the power supply for halogen bulb (TH4-100/TH4-200), refer to the instruction manual provided with the unit.

2 Replacing the halogen bulb

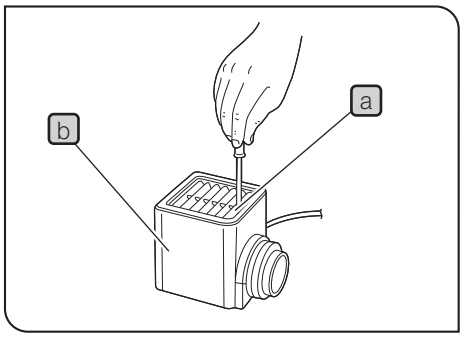

1. Loosen the mounting screw a on the top of the lamp housing using the Allen screwdriver.
2. Raise the lamp housing b up and remove it.

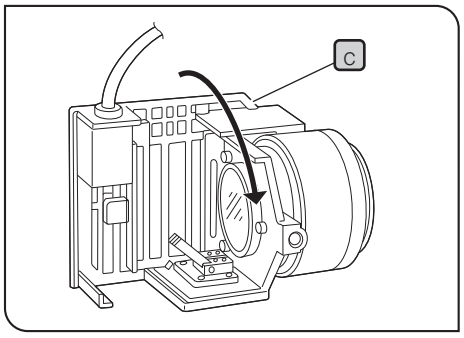

3. Tilt the lamp socket c in the arrow direction by 90°.

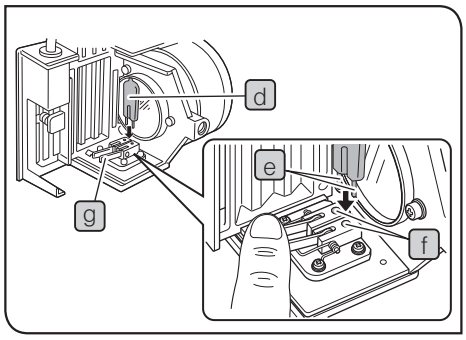

4 While pressing down the bulb fixing lever d, hold the halogen bulb e wrapped with gauze, etc. and insert the terminal f until it touches the pin position g.
Place the bulb fixing lever carefully to the original position to secure the bulb.

NOTE **Be careful not to touch the bulb directly with your hand. If fingerprints or stains are attached to the bulb, wipe it with a soft cloth, etc. to prevent the lifetime reduction or the bulb explosion. If fingerprints or stains are attached to the bulb, clean it by wiping gently with a piece of cleaning paper slightly moistened with absolute alcohol.**

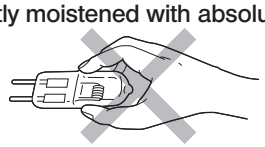

5 Fit the halogen lamp housing from the above and while pressing down the mounting screw, tighten it.

3 Attaching the halogen lamp housing

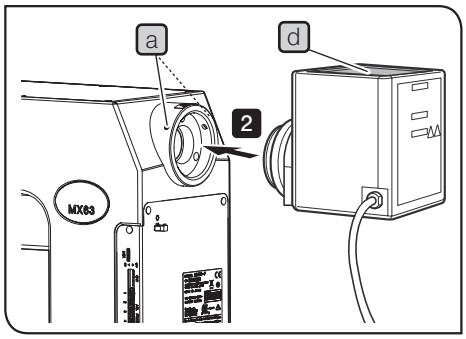

1 Loosen the mounting screw a (2 positions) on the microscope frame using the Allen screwdriver.

2 Insert the halogen lamp housing in the light source mount hole until it touches the end.

⚠CAUTION **Attach the lamp housing with the heat radiating fin b facing up, and secure he sufficient space above, below and at rear of the lamp housing. Otherwise, fire may be caused.**

3 Tighten the mounting screw using the Allen screwdriver.

NOTE **Do not tighten the screws too firmly. The lamp housing mount may be deformed.**

4 Connect the cable for halogen lamp housing to the connector of the power supply (TH4-100/TH4-200). For details, see "Connecting the cables" (P.96).

Applicable lamp	JCR12V100WB (made by Ushio Inc.)

1 Replacing the light guide halogen bulb for transmitted light illumination

For procedures to replace the light guide halogen bulb for transmitted light illumination, refer to the instruction manual provided with the unit.

6-4 Replacing the mercury burner

Applicable lamp	USH-103OL (made by Ushio Inc.)

1 Removing the mercury lamp housing

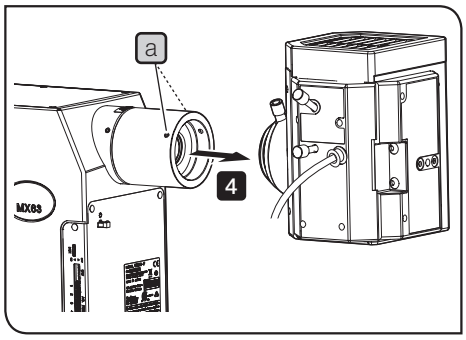

1. Set the main switch of the power supply for mercury burner (U-RFL-T) to ○ (OFF) and disconnect the power cord.
2. Remove the connector of the lamp housing from the power supply (U-RFL-T).
3. Loosen the mounting screw a of the adapter (MX-HGAD) using the Allen screwdriver.

NOTE **Be careful, if the mounting screw is loosened too much, it may come off.**

4. Remove the lamp housing.

For details of the power supply for mercury burner (U-RFL-T), refer to the instruction manual provided with the unit.

2 Replacing the mercury burner

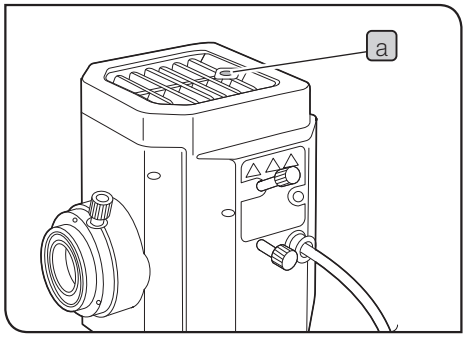

1. Loosen the mounting screw a on the top of the lamp housing using the Allen screwdriver.

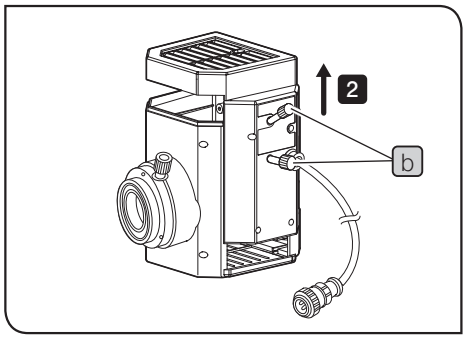

2. Hold the upper section of the lamp housing and pull it upward to remove the socket part.

NOTE **To prevent malfunctions, do not hold the lamp housing by the centering knobs b.**

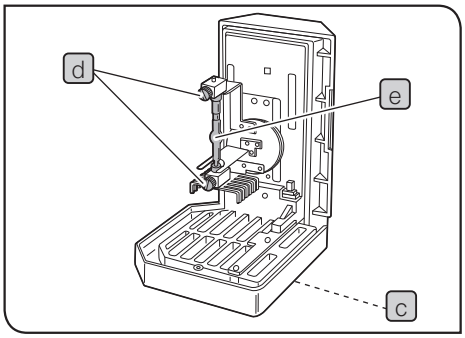

3 Place the socket part so that the heat radiating fin c faces down.

4 Loosen the burner mounting screws d (2 positions) of the socket part.

5 Hold the mercury burner e attached and remove the lower side from the mount first and then remove the upper side.

TIP The socket part is attached with either one of followings:
- Dummy burner for transportation (factory default)
- Old burner (to be replaced)

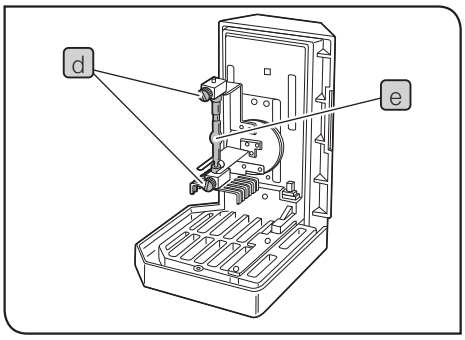

6 Hold the new mercury burner wrapped with gauze, etc. and attach the + (positive) pole of the mercury burner e to the fixed mount on the upper side, then attach the - (negative) pole to the mount on the lower side.

NOTE **Be careful not to touch the burner directly with your hand and avoid leaving fingerprints or stains on the burner. Otherwise, the burner may be exploded due to the glass distortion caused by stains. If fingerprints or stains are attached to the burner, clean it by wiping gently with a piece of cleaning paper slightly moistened with absolute alcohol.**

7 Tighten the burner mounting screws d (2 positions) of the socket part.

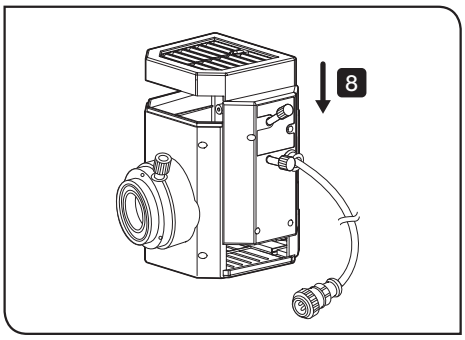

8 Align the external surfaces of the lamp housing with those on the socket part, push the lamp housing straight downward and place the socket part to the original position.

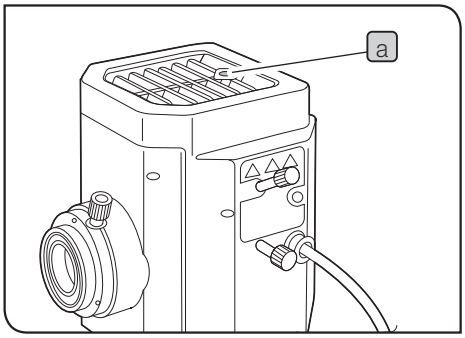

9 Tighten the mounting screw a using the Allen screwdriver.

10 Set the life counter of the power supply for mercury burner (U-RFL-T) to ”0.0”. For details, refer to the instruction manual provided with the unit.

Lamp service life USH-103OL: 300 hours

This value is based on the cycle of turning ON for 2 hours and turning OFF for 30 minutes.
Turning ON and OFF in the cycle shorter than this will seriously shorten the service life of the burner.

NOTE **When the burner is replaced, be sure to set the hour counter to ”0.0”.**

TIP The used mercury burner must be disposed of as the industrial waste. If you cannot dispose of it by yourself properly, contact EVIDENT for assistance.

3 Attaching the mercury lamp housing

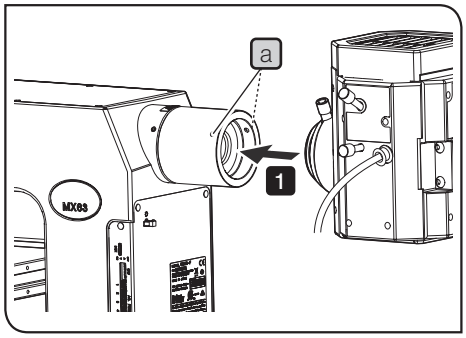

1 Insert the mount of the mercury lamp housing in the adapter (MX-HGAD). Make sure that the lamp housing is not tilted, and tighten the mounting screw a (2 positions) using the Allen screwdriver.

CAUTION
- **When attaching the mercury lamp housing, attach it so that the heat radiating fin faces up.**
- **When using the mercury burner light source, the light intensity increases during brightfield observation. Be sure to insert the ND filter 26ND0.5* provided with the adapter in the brightfield light path before using the mercury burner light source.**

* The 26ND0.5 filter must be attached by the EVIDENT representative.

2 Connect the cable of the mercury lamp housing to the power supply (U-RFL-T). For details, refer to the instruction manual provided with the unit.

3 Perform the centering of the mercury burner. For centering procedures, see page 73.

4 Centering the mercury lamp housing

The mercury burner emits the light by means of discharge produced when a current is supplied across electrodes. Therefore, the electrode positions must be adjusted by
replacing the burner, etc. This operation to adjust the electrode positions is called the centering of the mercury burner.
The centering of the mercury burner is recommended after the burner is replaced or when the unevenness is noticed in the brightness of the observed image.

1. Set the main switch to I (ON).

NOTE **Wait until the arc image stabilizes (5 to 10 minutes after ignition) before centering.**

2. Engage the light shielding plate of the filter slider to block the illumination light.
3. Use the observation light path selection knob to set the BF light path.
4. Engage the 10X objective in the light path, place the centering target U-CST on the stage with the cross line side facing up, and align the center of the concentric circles of the U-CST with the center of field of view.

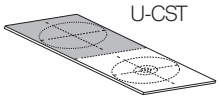

TIP U-CST can be substituted with white paper, etc.

5. Using the objective selection button and rotate the revolving nosepiece to engage the position without the objective (remove objective cap) in the light path.

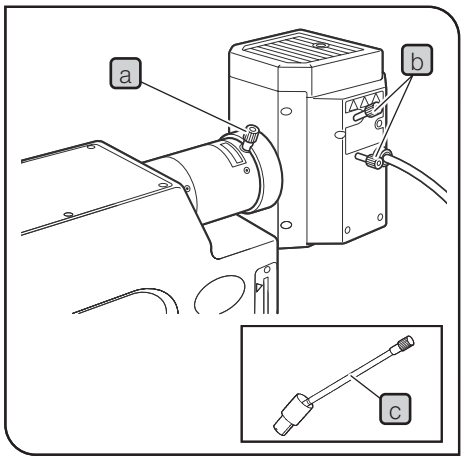

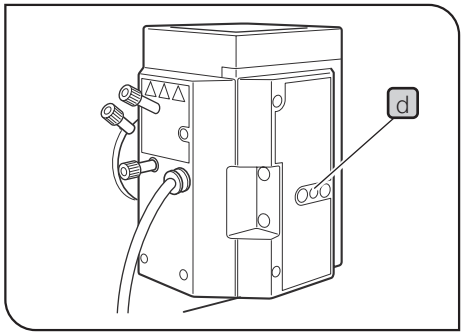

6 Push the aperture diaphragm open/close button and open the aperture diaphragm.

7 Rotate the collector lens focusing knob a to project the arc image on the U-CST. (Picture A)
If the arc image is not projected, rotate the burner centering knobs b.

TIP If it is difficult to use the collector lens focusing knob of the mercury lamp housing because it is placed at the back of the microscope, insert the extension handle (U-CLA) c in the knob and use the knob.

8 Rotate the burner centering knobs b to move the arc image to the center of the right (left) half of the field of view. (Picture B)

9 Fit the Allen screwdriver into the mirror focusing screw d on the rear of the lamp housing and rotate the screw to bring the mirror arc image into focus. (Picture C)

10 Rotate the burner centering knobs b to overlay the arc image with the mirror arc image. (Picture D)
During observation, rotate the collector lens focusing knob a to adjust the observation field to become uniform.

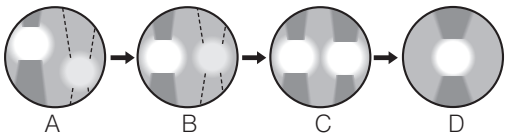

Applicable lamp	SHI-130OL (made by Ushio Inc.)

1 Replacing the light guide mercury light source

For procedures to replace the light guide mercury light source, refer to the instruction manual provided with the unit.

6-5 Replacing the filter

CAUTION **The filters are very hot immediately after use. Make sure that the filters are cooled down sufficiently before replacing the filters.**

The arbitrary filter with the following size can be inserted to the empty slider (U-25).

Diameter	Ø25 mm
Thickness	2.6 mm or less

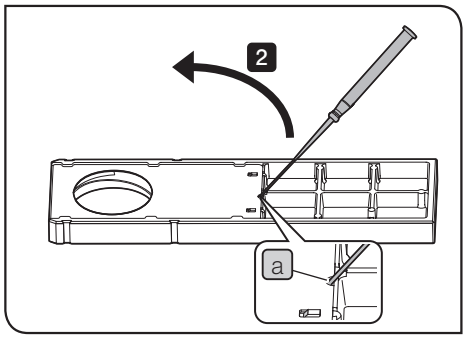

1 Set the display surface of the empty slider facing down and the surface attached with the cover facing up.

2 Insert the precision screwdriver in the notch a of the cover diagonally, and raise and slide the cover with the precision screwdriver to open the cover.

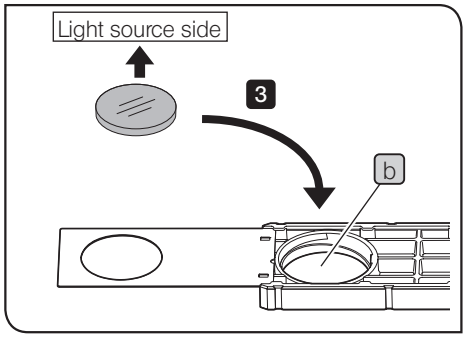

3 Insert the arbitrary filter in the filter mounting hole b of the slider.

NOTE **If the orientation of the filter to use is specified, insert the filter so that the filter surface of the light source side faces up.**

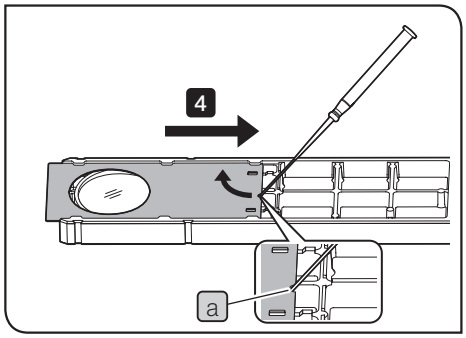

4 Insert the precision screwdriver in the notch a, and raise and slide the cover with the precision screwdriver to return the cover to the original position. At this time, slide the cover under the tabs (6 positions) c until the ”clap” sound is heard.

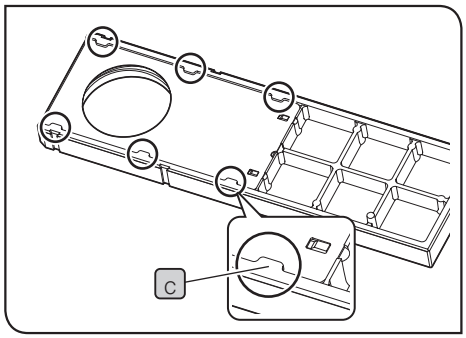

7 Troubleshooting

If problems occur, please review the following list and take remedial action as needed.
If you cannot solve the problem after checking the entire list, please contact EVIDENT for assistance.

Problem	Cause	Remedy	Page
1. Optical systems			
a) Even though the lamp is ON, the field of view is dark or invisible.	The lamp is burned out.	Replace with a new lamp.	68, 70
	The main switch of the light source applicable to the observation method is not set to ON.	Turn ON the light source of the observation method in use.	32, 46
	The light path selection knob of the trinocular tube is at the middle position.	Set the light path selection knob at the 👁 position.	26
	The observation light path selection knob is at the middle position.	Set the light path securely using the observation light path selection knob.	25
b) The field of view is obscured or is not evenly illuminated.	The filter or the analyzer is not inserted properly.	Insert the filter or the analyzer in the light path properly or remove it.	39, 51
	The light path selection knob of the trinocular tube is at the middle position.	Set the light path selection knob at the 👁 position.	26
	The observation light path selection knob is at the middle position.	Set the light path securely using the observation light path selection knob.	25
	The aperture diaphragm is not centered.	Center the aperture diaphragm.	103
c) Dust or dirt is visible in the field of view.	The tip of the lamp is dirty.	Clean them sufficiently.	12
	Dust or dirt is attached to the sample.		
	The top surface of the condenser is dirty.		
	The tip of the objective is dirty.		
	The eyepiece is dirty.		
	The glass plate is dirty.		
d) The observed image glares.	The aperture diaphragm is narrowed down too far.	Set the AS.PRESET switch of the aperture diaphragm.	99
e) The visibility of the observed image is poor. The image is not sharp. The contrast is poor.	The objective is not correctly engaged in the light path.	Specify the objective again using the objective selection button on the front panel.	28
	The tip of the condenser lens is dirty.	Clean them sufficiently.	12
	You are using the objective or eyepieces that are not specified.	Replace with the specified UIS2 (UIS) optical objectives or eyepieces.	84
f) The one-sided blur appears in the observed image. The observed image flows.	The sample is tilted.	Place the sample properly.	27, 90
	The objective is not correctly engaged in the light path.	Specify the objective again using the objective selection button on the front panel.	28

Problem	Cause	Remedy	Page
2. DIC observation			
a) The interference color does not appear.	The analyzer and the mirror unit are not in the light path.	Insert the analyzer and the mirror unit in the light path properly.	25, 51
b) The interference color appears, but the color is uneven. The contrast of interference color is weak.	You are using the objectives that are not specified.	Attach the specified objectives.	84
3. Observation tube			
a) The fields of view of two eyes do not coincide.	The interpupillary distance is incorrect.	Adjust the interpupillary distance correctly.	35
	The difference in diopter of two eyes is not corrected properly.	Adjust the diopter correctly.	35
	The different eyepiece type is used for right and left eyes.	Use the same type eyepieces for right and left eyes.	–
4. Stage			
a) When you touch the stage with hand, the image moves significantly.	The stage and holders are not secured correctly.	Secure the stage and holders firmly.	89, 90
5. Coarse focusing knob / Fine focusing knob			
a) The tension of the coarse focusing knob is too tight.	The coarse focusing tension adjustment ring is tightened too firmly.	Loosen the course focusing tension adjustment ring to the appropriate tightness.	29
b) The stage is lowered on its own and the focus is lost during observation.	The course focusing tension adjustment ring is loosened too much.	Tighten the coarse focusing tension adjustment ring to the appropriate tightness.	29
c) The coarse focusing knob does not rise to the upper limit.	The pre-focusing lever is locked at the lower position.	Unlock the pre-focusing lever.	30
6. Electrical systems			
a) The lamp turns ON and OFF.	The lifetime of the lamp will come soon.	Replace with a new lamp.	68, 70
	Cords are not connected properly.	Connect the cords securely.	96
b) Even though the aperture diaphragm open/close button is pressed, the diameter of the aperture diaphragm does not change.	DIP switch No.3 is set to ON.	Set the DIP switch No.3 to OFF.	98
	Failure of the aperture diaphragm	Set the main switch to ON again. If the problem is not solved, contact EVIDENT.	24
c) Even though the different objective is selected during brightfield observation, the aperture diaphragm is not interlocked.	The AS.PRESET value is set to “0”.	Set the AS PRESET switch.	99
	Failure of the aperture diaphragm	Contact EVIDENT.	–
d) Even though the observation method is changed from darkfield to brightfield, the aperture diaphragm is not interlocked.	The AS.PRESET value is set to “0”.	Set the AS PRESET switch.	99
	Failure of the aperture diaphragm.	Contact EVIDENT.	–

Problem	Cause	Remedy	Page
e) The pilot lamp turns ON, but the objective selection button and the aperture diaphragm open/ close button do not turn ON.	The cable for the LED lamp housing is not connected.	Set the main switch to O (OFF) and connect the cable for the LED lamp housing to the connector on the back of the microscope frame.	96
	The microscope frame or the LED lamp housing is damaged.	Contact EVIDENT.	–
f) The brightness cannot be relay when the LIM function is set.	The LIM switch is not pressed (LIM switch in ON) or the brightness is not stored properly.	Press the LIM switch to set the ”Replay” mode.(LIM switch is ON.) If the LIM switch is ON, press the LIM switch is OFF and store the brightness properly.	33
	The microscope frame or the revolving nosepiece is damaged.	Contact EVIDENT.	–
g) The MIX slider for reflected light observation (U-MIXR) cannot be controlled by operating the hand switch (BX3M-HS).	The MIX slider for reflected light observation (U-MIXR) is not engaged in the light path.	Engage the MIX slider for reflected light observation in the light path. You can check whether the MIX slider for reflected light observation is engaged or not by the POSITION indicator of the hand switch.	58
	The hand switch (BX3M-HS) is not connected.	Set the main switch to O (OFF) and connect the hand switch (BX3M-HS).	96
	The MIX slider for reflected light observation (U-MIXR) is not damaged.	Contact EVIDENT.	–
	The MIX slider for reflected light observation (U-MIXR) is disconnected.	Connect the MIX slider for reflected light observation.	96
	The cable for MIX slider (U-MIXRCBL) is disconnected.	Contact EVIDENT.	–
h) The CUBE or OB indicator of the hand switch (BX3M-HS) does not turn ON.	The hand switch (BX3M-HS) is not connected.	Set the main switch to O (OFF) and connect the hand switch (BX3M-HS).	96
	The microscope frame or the hand switch (BX3M-HS) is damaged.	Contact EVIDENT.	–

Problem	Cause	Remedy	Page
i) The system cannot be controlled by PC.	The interface cable is not connected.	Connect the interface cable.	104
	The main switch is set to O (OFF) while the communication between PC and the microscope is in process.	Close the application software. Then, set the main switch to I (ON) and start the application software.	24, 104
	The device driver is not installed.	Install the device driver from the installation media of the application software.	–
	The device is not detected properly.	Scan the device again with the device manager of the operation system.	–
	The USB cable is connected to the USB connector of PC for the first time.	Install the device driver in accordance with the installation wizard.	–
	The communication between the microscope frame and PC is disconnected.	Remove the interface cable from PC and connect it again. Then,restart the application software. If the communication is still not restored,turn OFF the power supplies of the microscope and PC and turn ON again.	24, 104

Display	Problem	Cause	Remedy	Page
7. Error indications by lighting and blinking of buttons				
Front panel 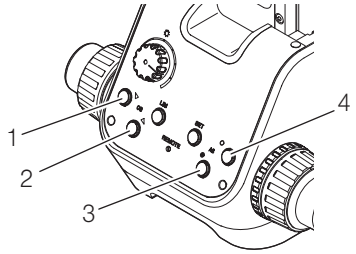				
“1” to “4” are ON.	a) “1” to ”4” are not operable.	The communication between the microscope frame and PC is disconnected.	Turn OFF the power supplies of the microscope and PC and turn ON again.	104
		The control board is damaged.	Contact EVIDENT.	–
“4” blinks 4 times.	b) The blinking starts when the aperture diaphragm (open) button is pressed.	The aperture diaphragm reaches the maximum limit.	Engage the 10X objective in the light path, remove eyepieces and look into the eyepiece sleeves. If the aperture diaphragm image is not visible, this is not a failure.	103
“3” blinks 4 times.	c) The blinking starts when the aperture diaphragm (close) button is pressed.	The aperture diaphragm reaches the minimum limit.	If the minimized aperture diaphragm is visible, this is not a failure.	103
“3” and “4” are OFF.	d) The aperture diaphragm button is turned OFF and does not function.	The aperture diaphragm button is set to disabled.	Set the DIP switch No.3 to OFF.	98
		The aperture diaphragm is damaged.	Contact EVIDENT.	–
“3” and ”4” blink.	e) Both two aperture diaphragm buttons keep blinking.	The microscope frame is damaged.	Contact EVIDENT.	–
“1” and “2” are OFF.	f) When the power is turned ON, the objective selection button does not turn ON.	You are using the revolving nosepiece that is not specified.	Replace with the specified revolving nosepiece.	65
		The revolving nosepiece is not attached properly.	Attach the revolving nosepiece again properly.	65
		The revolving nosepiece is damaged.	Contact EVIDENT.	–

Display	Problem	Cause	Remedy	Page
7. Error indications by lighting and blinking of buttons				
Front panel 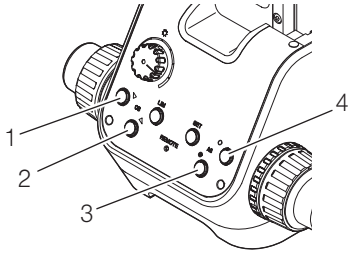				
“1” and ”2” blink.	g) Both two objective selection buttons keep blinking.	The DIP switch is not set properly.	Set the DIP switch properly.	98
		The objective interferes with the sample or the stage.	Make sure that the objective does not interfere the sample or stage, and turn OFF the power supplies of the microscope and turn ON again.	–
		The connection between the revolving nosepiece and the microscope frame is disconnected.	Attach the revolving nosepiece again properly.	65
		The revolving nosepiece is damaged.	Contact EVIDENT.	–
“1” to “4” are OFF.	h) The buttons from “1” to “4” keep blinking.	The hand switch (BX3M-HS) or the hand switch for exposure(U-HSEXP) is unpluged after turning ON the main switch of microscope.	Set the main switch to O (OFF) and connect the cords securely.	96

Repair request

If you cannot solve the problems even though taking actions described in Troubleshooting, please contact EVIDENT for assistance. At that time, please tell them the following information as well.

- Product name and abbreviation (Example: Stage MX-SIC8R)
- Product number
- Problem

8 Specifications

Configuration units		Product name	Specifications
Microscope frame		MX63-F	Focusing unit: Coarse/fine focusing coaxial knob: Stroke 32 mm Fine focusing knob: Moving distance per one rotation: 100 μm Equipped with tension adjustment mechanism and upper limit stopper mechanism Rating: 100-120/220-240Vac 0.5/0.3A 50/60Hz Maximum loadable weight (including stage and holders): MX63: 8 kg MX63L: 15 kg External interface: RS-232C (2m external cable is included, D-SUB 9-pin female straight connector) USB2.0 (2m external cable is included)
		MX63L-F	
Observation tube	Binocular tube	U-BI30-2	Field number 22
		U-TBI3-3	Field number 22, tilting type
	Trinocular tube	U-TR30-2	Field number 22
		U-TR30IR	Field number 22, for infrared observation
		U-ETR-4	Field number 22
		U-TTR-2	Field number 22, tilting type
		U-SWTR-3	Field number 26.5
		U-SEWTTR-5	Field number 26.5, tilting type
		MX-SWETTR	Field number 26.5, tilting type
Light source for reflected light illumination	LED light source	BX3M-LEDR	White LED; Maximum current: 700mA Average lifetime: Approx. 60,000 hours (designed value in normal operation)
	Halogen lamp housing	U-LH100L-3 U-LH100IR	Applicable bulb: 12V100WHAL-L (long life type made by PHILIPS Co. 7724I) Lifetime: Approx. 2,000 hours (Used in accordance with rating) 12V100WHAL (high light intensity type made by PHILIPS Co. 7023) Lifetime: Approx. 100 hours (Used in accordance with rating) Bulb voltage adjustment range: DC 1.0 V to 12.0 V (Changeable continuously) Power supply: TH4-100, TH4-200
	Mercury lamp housing	U-LH100HGARO U-LH100HG	Applicable burner: USH-103OL (made by Ushio Inc.) Lifetime: Approx. 300 hours (Used in accordance with rating) Power supply: U-RFL-T
	Light source for light guide illumination	U-LGPS	Light guide: U-LLG150, U-LLG300 Light guide adapter: U-LLGAD

Configuration units		Product name	Specifications	
Light source for transmitted light illumination	LED light source for light guide	LG-LSLED	White LED Average lifetime: Approx. 60,000 hours (Value derived by calculating the LED element alone based on LM80/TM21)	
Revolving nosepiece	Motorized type	U-D6REMC	6 holes, for brightfield and DIC observations	
		U-P5REMC	5 holes, for brightfield and DIC observations, equipped with centering mechanism	
		U-D6BDREMC	6 holes, for brightfield and DIC observations	
		U-D5BDREMC	5 holes, for brightfield and DIC observations	
		U-P5BDREMC	5 holes, for brightfield and DIC observations, equipped with centering mechanism	
Slider	For differential interference contrast	U-DICR	Standard type	
		U-DICRHC	High resolution type	
		U-DICRHC	High contrast type	
	For MIX	U-MIXR	Equipped with LED ring illumination, light control by hand switch	
Stage		MX-SIC8R	Coaxial flexible knob at lower right Grip clutch mechanism	Movable range: 210 mm (Y) x 210 mm (X)
		MX-SIC6R2		Movable range: 158 mm (Y) x 158 mm (X)
		MX-SIC1412R2		Movable range: 356 mm (Y) x 305 mm (X)

Operating environment

- Indoor use
- Altitude: Max. 2000 meters
- Ambient temperature: 10 to 35 °C (50 to 95 °F)
- Maximum relative humidity: 80% for temperatures up to 31 °C (88 °F) (without condensation)

  In case of over 31 °C (88 °F), the relative humidity is decreased linearly through 70% at 34 °C (93 °F), 60% at 37 °C (99 °F), and to 50% at 40 °C (104 °F).
- Supply voltage fluctuation: ±10 %
- Pollution degree: 2 (in accordance with IEC60664-1)
- Installation/Overvoltage category: II (in accordance with IEC60664-1)

9 Optical performance list «UIS2 series»

The following table shows the combined optical performance of the eyepiece and the objective. The picture on the right shows the various performances indicated on the objectives.

NOTE **There are objectives that can be used in combination with this product even though they are not listed here.**
Contact EVIDENT for details.

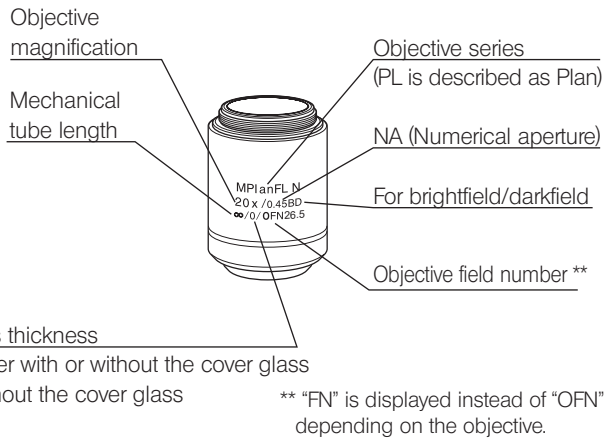

Observation method by objective

Series name	Magnification	Brightfield	Darkfield	BF/DF simultaneously	Polarization	DIC	Fluorescence	Infrared
MPLN M Plan Achromat	5X/10X/20X/50X/100X	●						
MPLN-BD M Plan Achromat BD	5X/10X/20X/50X/100X	●	●	●				
MPLFLN M Plan Semi Apochromat	1.25X*1/2.5X/*15X/10X/20X/40X*2/50X/100X	●			●	●	●	●
MPLFLN-BD M Plan Semi Apochromat BD	5X/10X/20X/50X/100X/150X	●	●	●	●	●	●	●
MPLFLN-BDP M Plan Semi Apochromat BDP	5X/10X/20X/50X/100X	●	●	●	●	●	●	●
LMPLFLN Long working distance M Plan Semi Apochromat	5X/10X/20X/50X/100X	●			●	●	●	●
LMPLFLN-BD Long working distance M Plan Semi Apochromat BD	5X/10X/20X/50X/100X	●	●	●	●	●	●	●
SLMPLN Super long working distance M Plan Achromat	20X/50X/100X	●						
MPLAPON M Plan Apochromat	50X/100X	●			●	●	●	●
	100XO2*3	●			●			
LMPLN-IR IR Long working sistance M Plan Achromat	5X/10X	●						●
LCPLN-IR IR M Plan Achromat	20X/50X/100X	●						●
LCPLFLN-LCD Long working distance M Plan Achromat	20X/50X/100X	●				●	●	●

*1 For reflected light brightfield observation

*2 Not available for reflected light DIC observation.

*3 Oil immersion objective

Basic information by objective

Series name / Notation / Optical performance		Magnification	Numerical aperture	Working distance (mm)	Cover glass thickness (mm)	Eyepiece: WHN10X (FN22) Total magnification	Eyepiece: WHN10X (FN22) Actual field of view (mm)	Eyepiece: SWH10X (FN26.5) Total magnification	Eyepiece: SWH10X (FN26.5) Actual field of view (mm)
UIS2 series									
MPLN M Plan Achromat (OFN22) **	MPlanN	5X	0.10	20.0	–	50X	4.4	–	–
		10X	0.25	10.6	–	100X	2.2		
		20X	0.40	1.3	0	200X	1.1		
		50X	0.75	0.38	0	500X	0.44		
		100X	0.90	0.21	0	1000X	0.22		
MPLN-BD M Plan Achromat BD (OFN22) **	MPlanN-BD	5X	0.10	12.0	–	50X	4.4	–	–
		10X	0.25	6.5	–	100X	2.2		
		20X	0.40	1.3	0	200X	1.1		
		50X	0.75	0.38	0	500X	0.44		
		100X	0.90	0.21	0	1000X	0.22		
MPLFLN M Plan Semi Apochromat (OFN26.5) ** OFN22 only for 1.25X	MPlanFLN	1.25X	0.04	3.5	–	12.5X	17.6	–	–
		2.5X	0.08	10.7	–	25X	8.8	25X	10.6
		5X	0.15	20.0	–	50X	4.4	50X	5.3
		10X	0.30	11.0	–	100X	2.2	100X	2.65
		20X	0.45	3.1	0	200X	1.1	200X	1.33
		40X	0.75	0.63	0	400X	0.55	400X	0.67
		50X	0.80	1.0	0	500X	0.44	500X	0.53
		100X	0.90	1.0	0	1000X	0.22	1000X	0.27
MPLFLN-BD M Plan Semi Apochromat BD (OFN26.5) **	MPlanFLN-BD	5X	0.15	12.0	–	50X	4.4	50X	5.3
		10X	0.30	6.5	–	100X	2.2	100X	2.65
		20X	0.45	3.0	0	200X	1.1	200X	1.33
		50X	0.80	1.0	0	500X	0.44	500X	0.53
		100X	0.90	1.0	0	1000X	0.22	1000X	0.27
		150X	0.90	1.0	0	1500X	0.15	1500X	0.18
MPLFLN-BDP M Plan Semi Apochromat BDP (OFN26.5) **	MPlanFLN-BDP	5X	0.15	12.0	–	50X	4.4	50X	5.3
		10X	0.25	6.5	–	100X	2.2	100X	2.65
		20X	0.40	3.0	0	200X	1.1	200X	1.33
		50X	0.75	1.0	0	500X	0.44	500X	0.53
		100X	0.90	1.0	0	1000X	0.22	1000X	0.27
LMPLFLN Long working distance M Plan Semi Apochromat (OFN26.5) **	LMPlanFLN	5X	0.13	22.5	–	50X	4.4	50X	5.3
		10X	0.25	21.0	–	100X	2.2	100X	2.65
		20X	0.40	12.0	0	200X	1.1	200X	1.33
		50X	0.50	10.6	0	500X	0.44	500X	0.53
		100X	0.80	3.4	0	1000X	0.22	1000X	0.27
LMPLFLN-BD Long working distance M Plan Semi Apochromat BD (OFN26.5) **	LMPlanFLN-BD	5X	0.13	15.0	–	50X	4.4	50X	5.3
		10X	0.25	10.0	–	100X	2.2	100X	2.65
		20X	0.40	12.0	0	200X	1.1	200X	1.33
		50X	0.50	10.6	0	500X	0.44	500X	0.53
		100X	0.80	3.3	0	1000X	0.22	1000X	0.27

Series name	Notation	Magnification	Numerical aperture	Working distance (mm)	Cover glass thickness (mm)	Eyepiece: WHN10X (FN22) Total magnification	Eyepiece: WHN10X (FN22) Actual field of view (mm)	Eyepiece: SWH10X (FN26.5) Total magnification	Eyepiece: SWH10X (FN26.5) Actual field of view (mm)
UIS2 series									
SLMPLN Super long working distance M Plan Achromat (OFN26.5) **	SLMPlanN	20X	0.25	25.0	0	200X	1.1	200X	1.33
		50X	0.35	18.0	0	500X	0.44	500X	0.53
		100X	0.60	7.5	0	1000X	0.22	1000X	0.27
MPLAPON M Plan Apochromat (OFN26.5) **	MPlanApoN	50X	0.95	0.35	0	500X	0.44	500X	0.53
		100X	0.95	0.35	0	1000X	0.22	1000X	0.27
		100XO2	1.45	0.1	0	1000X	0.22	1000X	0.27
LMPLN-IR IR Long working dsistance M Plan Achromat (OFN22) **	LMPlan-IR	5X	0.1	23	–	50X	4.4	50X	5.3
		10X	0.3	18	–	100X	2.2	100X	2.65
LCPLN-IR IR M Plan Achromat (OFN22) **	LCPlan-IR	20X	0.45	8.3	0-1.2	200X	1.1	200X	1.33
		50X	0.65	4.5	0-1.2	500X	0.44	500X	0.53
		100X	0.85	1.2	0-0.7	1000X	0.22	1000X	0.27

For liquid crystal panel

Series name	Notation	Magnification	Numerical aperture	Working distance (mm)	Cover glass thickness (mm)	Eyepiece: WHN10X (FN22) Total magnification	Eyepiece: WHN10X (FN22) Actual field of view (mm)	Eyepiece: SWH10X (FN26.5) Total magnification	Eyepiece: SWH10X (FN26.5) Actual field of view (mm)
UIS2 series									
LCPLFLN-LCD M Plan Semi Achromat (OFN26.5) **	LCPlanFLN-LCD*	20XLCD	0.45	7.4-8.3	0-1.2	200X	1.1	200X	1.33
		50XLCD	0.70	2.2-3	0-1.2	500X	0.44	500X	0.53
		100XLCD	0.85	0.9-1.2	0-0.7	1000X	0.22	1000X	0.27

*: Equipped with the correction collar according to the glass thickness.

Abbreviations used for objective

Ex) M PL (Plan) FL N 100 BD

- BD
  - None: For brightfield
  - BD: For brightfield/darkfield
  - BDP: For brightfield/darkfield, polarization
  - IR: For IR
- 100
  - Number: Objective magnification
- N
  - None: UIS objective
  - N: UIS2 objective
- FL
  - None: Achromat: Corrects the aberration by 2 wavelengths (blue and red).
  - FL: Semi-apochromat: Corrects the color aberration in the visible range (from blue-violet to red).
  - APO: Apochromat: Corrects the color aberration in the entire visible range (from violet to red).
- PL (Plan)
  - PL Plan: Corrects the image plane curvature around the field.
- M
  - M: For metal (without cover)
  - LM: For long working distance metal
  - SLM: For super long working distance metal
  - LC: For observation through glass

Glossary in optical performance table

Working distance:	Distance between the top surface of the sample and the tip of the objective.
Numerical aperture:	Important value that determines the performances (resolution, focal depth and brightness) of the objective. Resolution.....Increases in proportion to the numerical aperture. Focal depth.....Decreases in proportion to the numerical aperture. Brightness.....Increases in proportion to the square of the numerical aperture. (comparing with the same magnification)
Resolution:	Indicates the limit where the objective can identify two approaching images using the distance between 2 points on the sample surface.
Focal depth:	Indicates the sample depth focused at the same time. The depth increases when the aperture diaphragm is narrowed down and decreases when the numerical aperture of the objective becomes larger.
Field number:	Indicates the diameter of the image area visible by the eyepiece in mm.
Actual field:	Indicates the diameter of the field area on the sample surface in mm.

10-1 Assembly diagram

The numbers in the following diagram represent the order to attach each unit.
The units shown in the diagram are typical units. For units which are not described below, contact EVIDENT or refer to the latest catalogs.

NOTE **Before assembling the microscope, remove dust and dirt from the mount of each unit and assemble carefully to prevent from scratches.**

The procedures to assemble the units shown by ● numbers are described on the next page and after.

TIP Assemble the units using the Allen screwdriver (opposite side: 3 mm) and the Allen wrench (opposite side: 3mm) provided with the microscope frame. Do not use the Allen wrench for purposes other than attaching the stage.

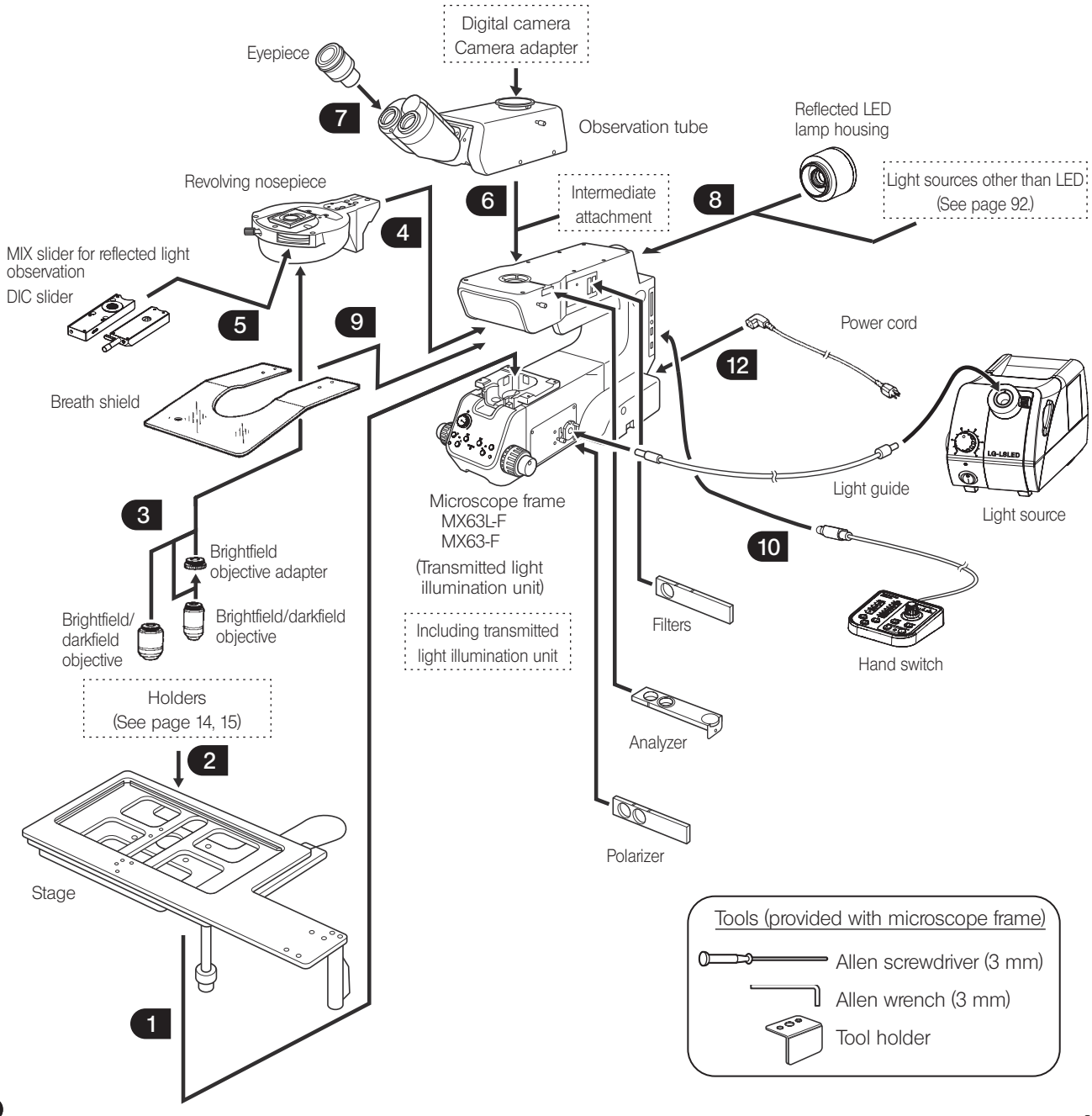

10-2 Assembly procedures

CAUTION **This product contains the motorized parts. For safety purpose, connect the power cord plug last.**

1 Attaching the stage

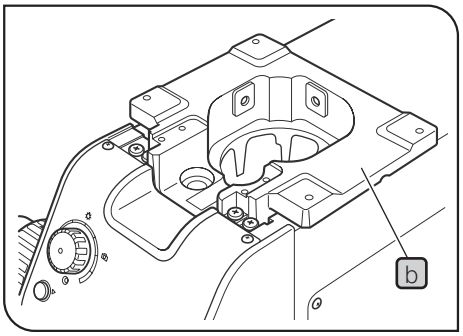

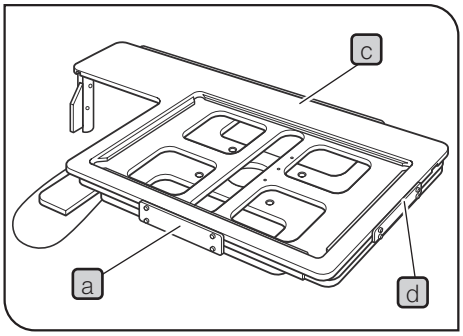

1. Remove the transport clamping plate a from the back of the stage using the Allen wrench. The removed screws are used to secure the stage when attaching it.

TIP
- With the MX-SIC6R2, the mounting screw holes are not visible unless the upper stage is moved. Remove the transport clamping plates from the front and rear of the stage.
- The transport protection sheet is placed at two positions of the MX-SIC6R2 and MX-SIC8R stages. Be sure to remove them before use.

2. Place the stage gently on the stage holder b so that the coarse adjustment grip of the stage or X-axis/Y-axis knobs come to the right side. Then, tighten four screws temporarily using the Allen screwdriver or Allen wrench.

3. Remove the transport clamping plates from the front c and left side d (MXSIC1412R2 only), move the stage to the backmost position, make sure that the stage and arm do not interfere with each other, and tighten four screws completely.

TIP If the stage is not moved for a long period, the clutch and the belt will stick together and the clutch function will not work smoothly. If this phenomenon occurs, remove the stickiness according to "Stickiness between clutch and belt" (P.27).

Attaching the Y-stroke limit stopper

TIP For the transmitted light observation using the MX-SIC1412R2 stage (only when MX-TILLA is used), it is required to attach the stopper that limits the Y-axis stroke to 10 inches in order to prevent the interference between the stage and the protruded part of the condenser.

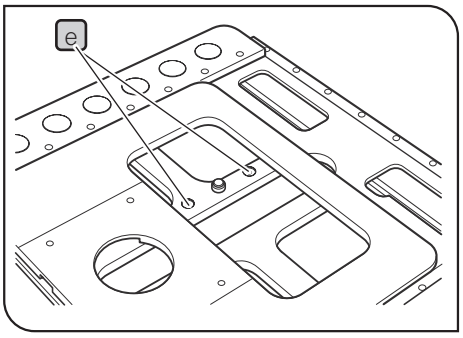

1. Place the stage upside down and remove two transport clamping plates once.

2. Move the stage, and insert the stopper provided with the stage into the stopper mounting screw holes e (2 positions) on the middle stage.

3. Attach only the front transport clamping plate.

NOTE **Before transporting the stage, be sure to attach the transport clamping plates a, c and e, and package the stage securely. Do not transport the stage when it is attached to the microscope frame or inadequately packaged. Otherwise, the stage will be damaged.**

2 Attaching the holders

TIP Attach a holder in the direction so that the notch on the side surface of the holder comes to the left. The adjustment of the levelness is performed in this direction.

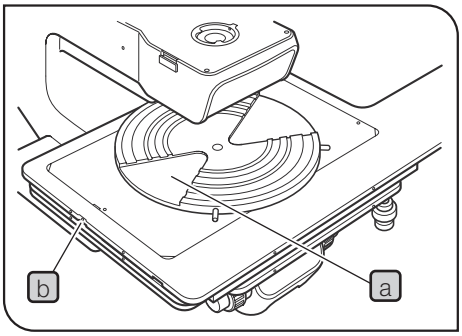

Attaching the wafer holder

1. Place the edge of the wafer holder plate a on the stage gently.
2. Push the wafer holder plate from above to make sure that it is not tilted.
3. Secure the holder clamping screw b on the left side of the stage using a flathead screwdriver.

NOTE **The levelness of the holder is adjusted by the heights of three screws on the bottom of the stage. Do not push the peripheral area of the holder. The folder may be tilted.**

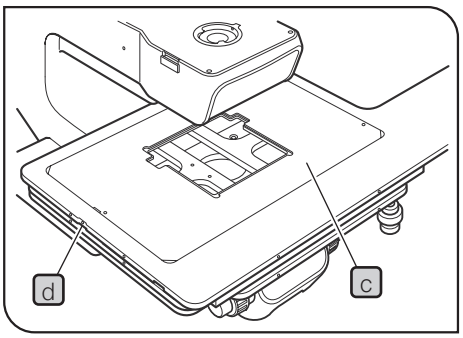

Attaching the mask holder

1. Place the mask holder c on the top surface of the stage carefully and make sure that the holder is not tilted. Then, secure the mask holder by tightening the holder clamping screw d on the left side of the stage using the flathead screwdriver.

Attaching the black plate or glass plate

1. Place the plate on the top surface of the stage carefully and tighten the holder clamping screw on the left side of the stage.

NOTE **When attaching the glass plate, do not tighten the clamping screw excessively to prevent the glass plate from cracking. Tighten the screw lightly to the extent that the glass plate does not rattle noticeably when attached.**

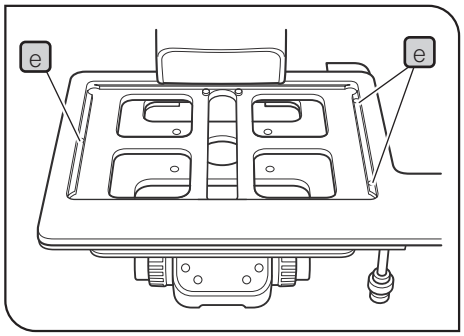

Adjusting the levelness of the holder plate

TIP The levelness of the stage movement and the top surface of the wafer holder have been adjusted as factory default. However, if the finer adjustment is required or when using a non-EVIDENT holder, apply drops of alcohol on screws e to loosen the screw lock. Then, move the screws up and down using a flathead screwdriver from below.

3 Attaching the objective

For attaching procedures, see “Removing and attaching the objective” (P.66).

4 Attaching the revolving nosepiece

For attaching procedures, see “Attaching the revolving nosepiece” (P.67).

5 Attaching the MIX slider / DIC slider for reflected light observation

For attaching procedures, see “Inserting the MIX slider for reflected light observation” (P.58) or “Setting the DIC slider” (P.52).

6 Attaching the observation tube

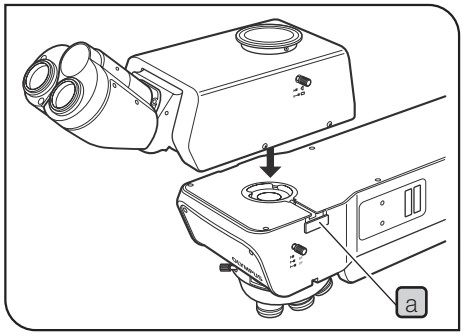

1. Loosen the tube clamping screw a sufficiently using the Allen screwdriver.
2. Fit the circular dovetail at the bottom of the observation tube into the tube mount on the top surface of the arm.
3. Tighten the tube clamping screw a to secure the observation tube.

7 Attaching the eyepiece

For attaching procedures, see “6-1 Removing and attaching the eyepiece” on page 63.

8 Attaching the light source for reflected light illumination

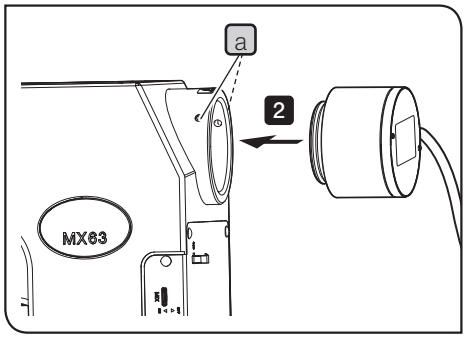

Attaching the LED illumination

1. Loosen the mounting screw a (2 positions) on the microscope frame using an Allen screwdriver.

NOTE **Be careful, if the mounting screw is loosened too much, it may be come off.**

2. Insert the reflected LED light source or the liquid light guide adapter into the light source mounting hole of the microscope frame until it touches the end.

NOTE **When attaching the reflected LED light source, attach it so that the cable for the reflected LED light source comes to the right side when looking from the back of the microscope frame.**

3. Tighten the mounting screw a of the microscope frame (2 positions) using the Allen screwdriver.
4. Connect the cable to the connector on the back of the microscope frame. For details, see “Connecting the cables” (P.96).

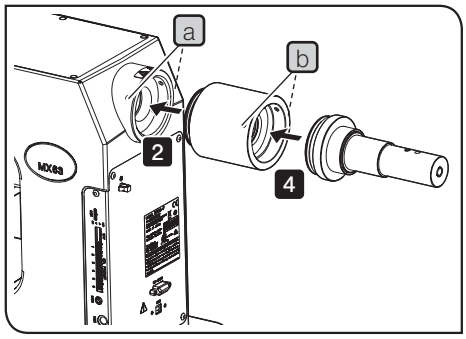

This picture shows the procedure to attach the liquid light guide. The same procedure applies when attaching the mercury lamp housing.

Attaching the liquid light guide or mercury lamp housing

NOTE **In order to attach the liquid light guide or the mercury lamp housing, the optional adapter (MX-HGAD) is required.**

1. Loosen the clamping screws a (2 positions) of the microscope frame using the Allen screwdriver.
2. Insert the adapter (MX-HGAD) in the light source mounting hole of the microscope frame until it touches the end, and tighten the mounting screw a (2 positions).
3. Loosen the mounting screw b (2 positions) of the adapter (MX-HGAD) using the Allen screwdriver.
4. Insert the liquid light guide adapter into the adapter (MX-HGAD) until it touches the end, and tighten the mounting screw b (2 positions).

For procedures to attach the mercury lamp housing, see “Replacing the mercury burner” (P.70). After the mercury lamp housing is attached, perform the centering of the mercury burner.

Attaching the mercury burner

For attaching procedures, see “Replacing the halogen bulb” (P.68).

Attaching two lamp housings

NOTE
- The attachable lamp housings or adapters are restricted in combinations, orders and directions. (See the diagram below.)
- Attach the double lamp housing adapter (U-DULHA) so that the illuminator a comes to the left side horizontally when facing to the back side of the microscope frame.

« Attaching to MX63 »

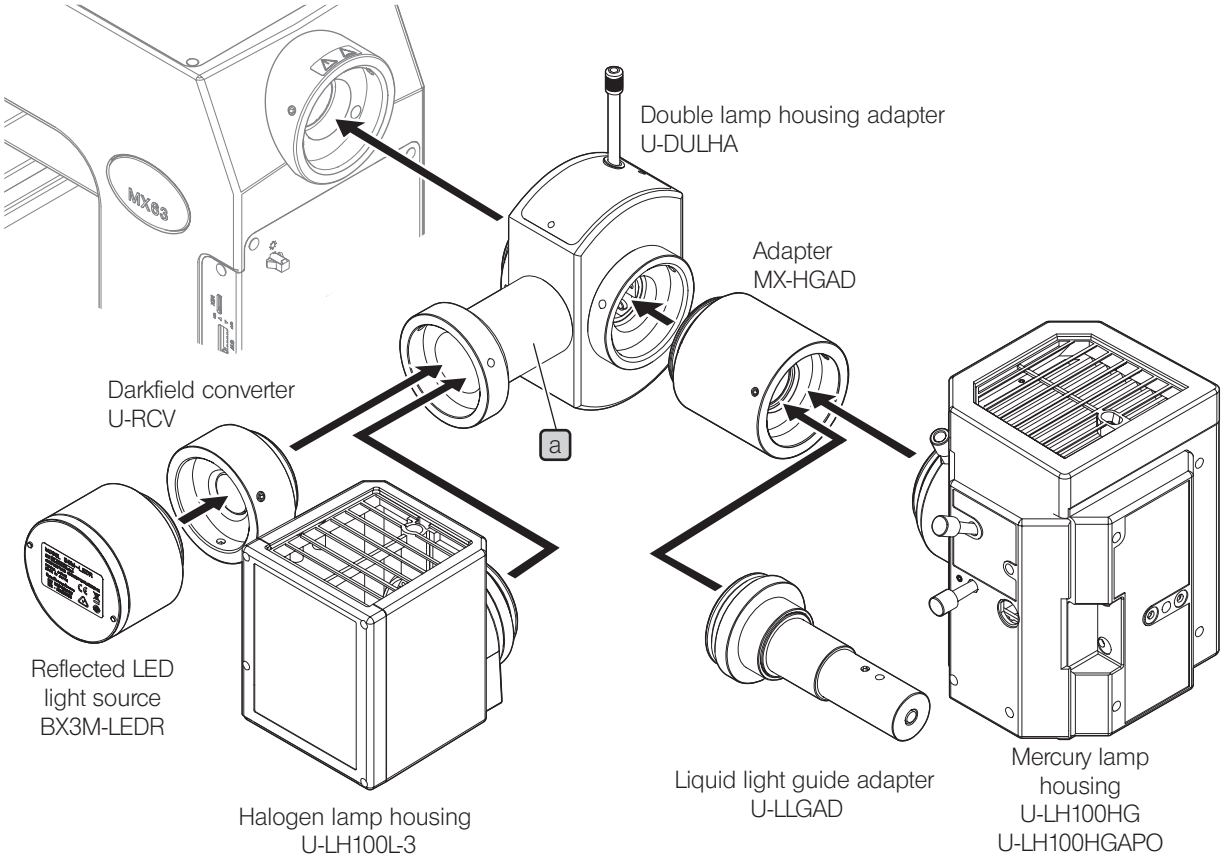

« Attaching to MX63L »

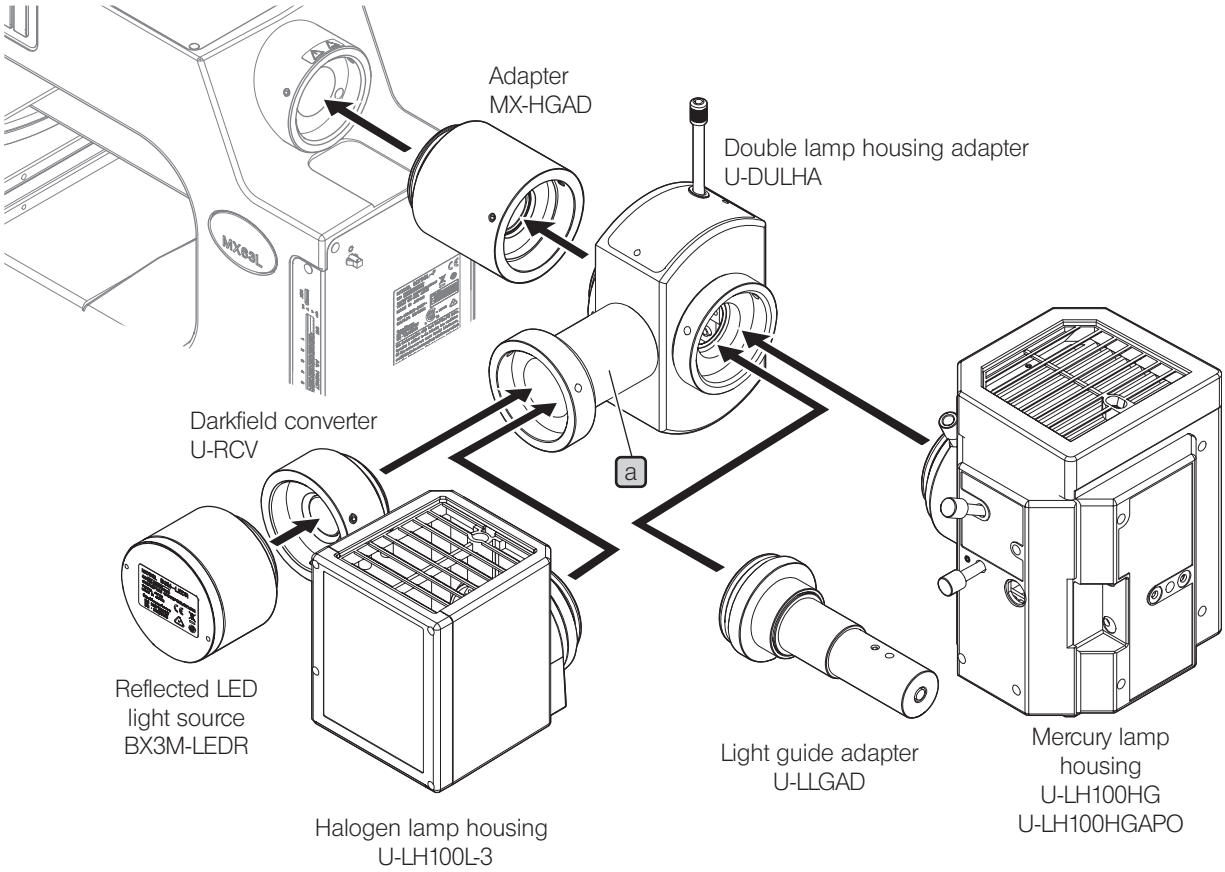

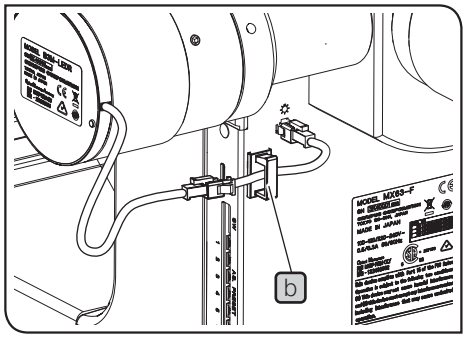

Layout of the extension cable for reflected LED light source

If you want to connect the light source for reflected LED to the microscope frame using the double lamp housing adapter (U-DULHA), the extension cable (MX-LLHECBL) is required. Attach the cable holder b provided with the extension cable as shown in the picture, and lay out the cable so that the cable does not contact the lamp housing, etc.

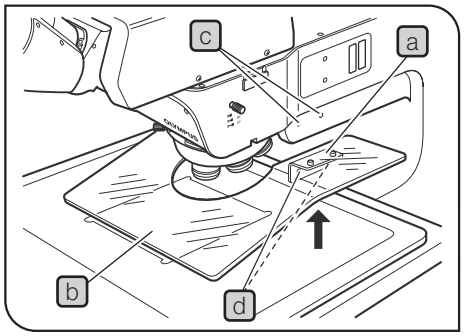

9 Attaching the breath shield MX-BSH-ESD-2

NOTE **After the revolving nosepiece attached, attach the breath shield.**

1. Attach the breath shield mounting fixture a on the breath shield b temporarily using the provided screws (shorter ones) with the Allen screwdriver. (2 positions)

NOTE **If they are attached completely, the breath shield cannot be attached to the microscope frame.**

2. Align the breath shield clamping screw holes c with the mount holes d of the mounting fixture and secure using the provided screws (longer ones)

3. Tighten the screws completely that were secured temporarily.

NOTE **Do not tighten the screws excessively to prevent the breath shield from cracking.**

10 Connecting the cables

⚠CAUTION Always use the USB cables and RS-232C cable interface cables provided by EVIDENT. If you use the commercially available USB2.0 cables or hubs, the system operations cannot be ensured.

NOTE
- Before connecting or disconnecting cables, set the main switch to O (OFF) and unplug the power cord from the outlet.
- This product contains the motorized parts. For safety purposes, connect the power cord plug last.
- Cables are vulnerable when bent or twisted. Never subject them to excessive force.
- Be sure to connect only cables specified by EVIDENT to the connectors.
  Connect the connectors in the correct orientation paying attention to the shape of the connector.
  If the connector is attached with clamping screws, be sure to tighten them.
- When connecting PC to the microscope frame, connect only either of the USB cable or the RS-232C cable.

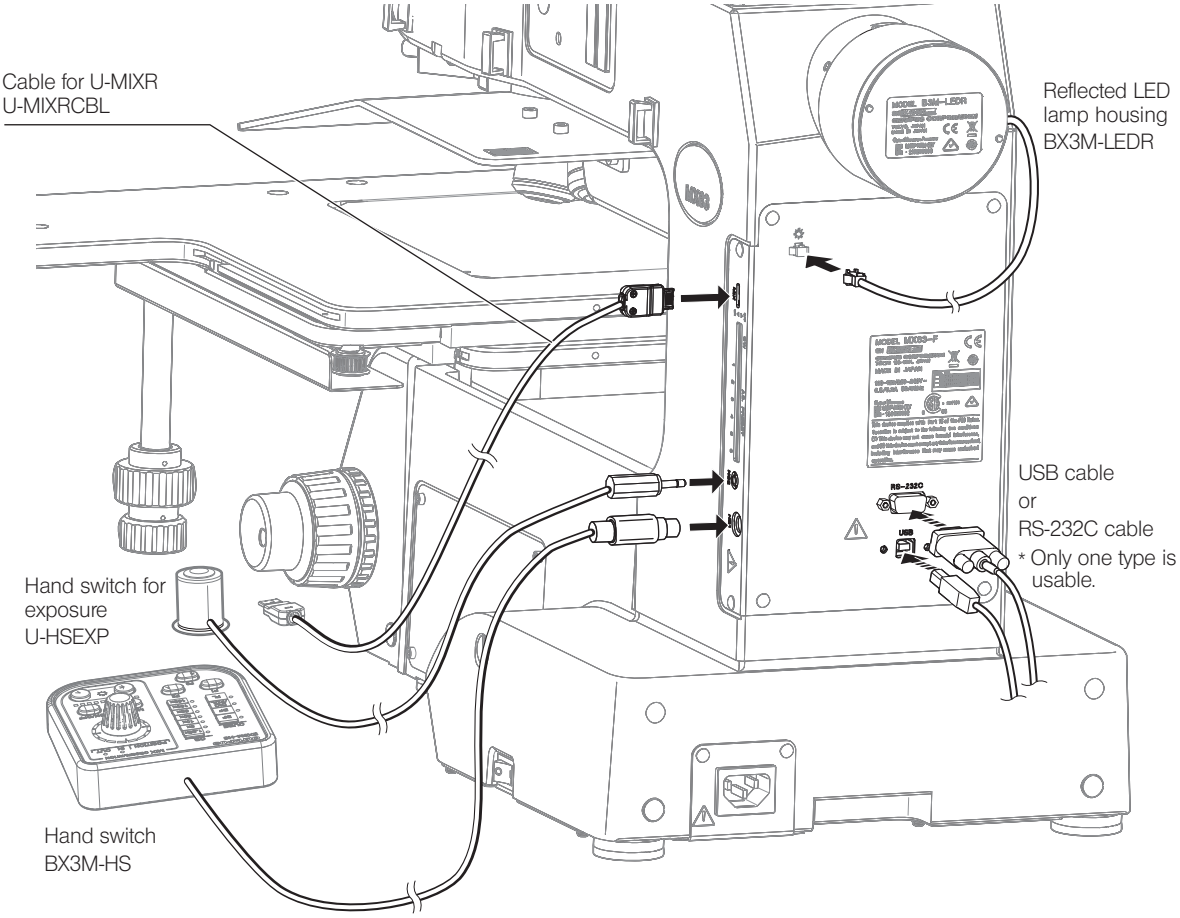

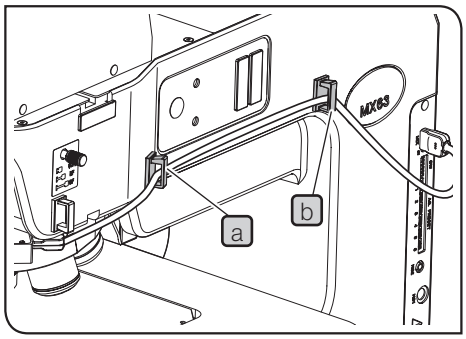

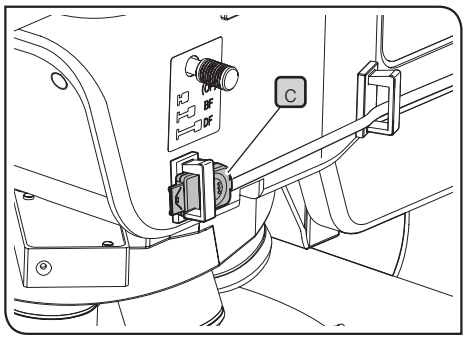

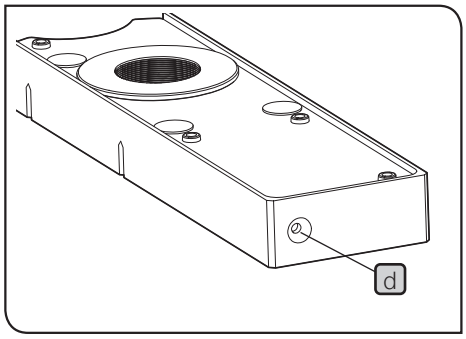

Layout of the cable for MIX slider for reflected light observation

1 Attach the cable holders at 2 positions (a, b) on the side surface of the microscope frame.

TIP The cable holders (3 pcs.) are provided with the cable for MIX slider (U-MIXRCBL).

2 Open the cable holder a and b, put the cable for MIX slider for reflected light observation (U-MIXR) into the cable holder, and close the cable holder.

TIP If you disconnect the connector from the MIX slider for reflected light observation, store the cable in the cable holder as shown in c.
When the connector is disconnected, the indicator d of the MIX slider for reflected light observation turns OFF.

Indicator of MIX slider for reflected light observation	
When the connector is connected	Turns ON
When the connector is not connected	Turns OFF

11 Setting the DIP switch / AS.PRESET switch

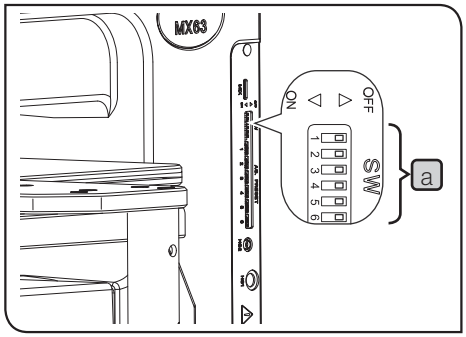

Setting the DIP switch

Make sure that the connections are correct.

Before setting the DIP switch a, set the main switch of the microscope to O (OFF). The switch settings are read and defined only when the power is turned ON.

NOTE **Be careful not to touch the internal circuit boards when setting the DIP switches. If you touch it, the internal circuit boards may be damaged by static electricity.**

⚠CAUTION **Since the human body is charged with a small amount of static electricity, discharge it from your body before setting switches. You can discharge the static electricity by lightly touching any metallic objects around you with hand.**

□: Factory default setting

DIP switch a (ON / OFF)	Function		Setting
1	Revolving nosepiece type (Number of holes)	OFF	U-D5BDREMC/U-P5REMC/ U-P5BDREMC
		ON	U-D6REMC/U-D6BDREMC
2	Buzzer sound	OFF	The buzzer sound is heard.
		ON	The buzzer sound is not heard.
3	Aperture diaphragm open/ close button setting	OFF	The setting is enabled.
		ON	The setting is disabled.
4	Glare prevention by AS when changing objectives	OFF	Does not prevent the glare.
		ON	Prevents the glare.
5	Glare prevention by LED when changing objectives	OFF	Prevents the glare.
		ON	Does not prevent the glare.
6	Reserved by maker	OFF	This switch is always kept OFF.
		ON	

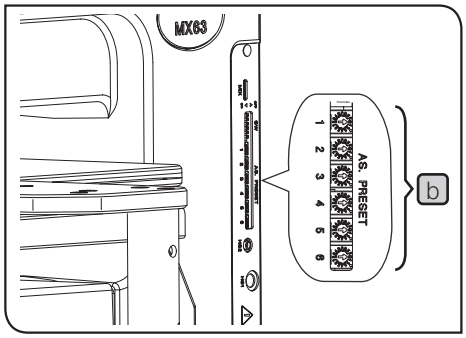

Setting the AS.(aperture diaphragm) PRESET switch

Setting the AS (aperture diaphragm) diameter per each objective using the AS PRESET switches b allows you to change the AS diameter to the AS diameter value specified according to the selected objective.

TIP
- In the darkfield observation, the AS diameter is fixed at the open position automatically.
- The AS diameter can be set using the AS PRESET switches while the main switch is set to ▌(ON).

Setting the AS diameter

Insert a precision flathead screwdriver, etc. into the center of the AS PRESET switch b that corresponds to the objective mounting screw No., and move the arrow to the intended setting value. See “Table 1 Recommended AS PRESET values” (next page) for recommended values.

AS interlocking

When the brightfield observation or the option mirror unit are selected as the observation light path, pressing the objective selection button on the front panel will change the AS diameter to the setting value when the objective is selected. If the AS switch diameter is set while the main switch ❍ is set to (OFF), the AS diameter is changed to the setting value per each objective when the power is turned.

Table 1 Recommended AS PRESET values (○ mark position)

		0	1	2	3	4	5	6	7	8	9	A	B	C	D	E	F
		AS: not interlocked	Open AS ←									→ Close AS					
MPLN/ MPLN-BD Series	5X		AS: maximum				○										AS: minimum
	10X					○											
	20X						○										
	50X								○								
	100X											○					
MPLFLN/ MPLFLN-BD/ MPLFLN-BDP Series	1.25X				○												
	2.5X				○												
	5X				○												
	10X				○												
	20X						○										
	40X						○										
	50X							○									
	100X											○					
	150X					○											
LMPLFLN/ LMPLFLN-BD Series	5X					○											
	10X						○										
	20X							○									
	50X										○						
	100X												○				
LMPLN-IR/ LCPLN-IR Series	5X							○									
	10X				○												
	20X					○											
	50X										○						
	100X									○							
LCPLFLN-LCD Series	20X					○											
	50X								○								
	100X												○				
SLMPLN Series	20X									○							
	50X													○			
	100X														○		
MPLAPON Series	50X							○									
	100X											○					
	100XO2									○							

- Setting the AS value to ”0” allows you to lock the AS interlocking in association with the objective selection.
- All AS values are set to ”0” as factory default.
- The recommended AS. PRESET values are set between 70% and 80% of the aperture diaphragm image. For procedures to check the aperture diaphragm image, see “Centering of the aperture diaphragm of reflected light illumination” (P.103).
- For fluorescence observation, set the value to 1.

12 Connecting the power cord

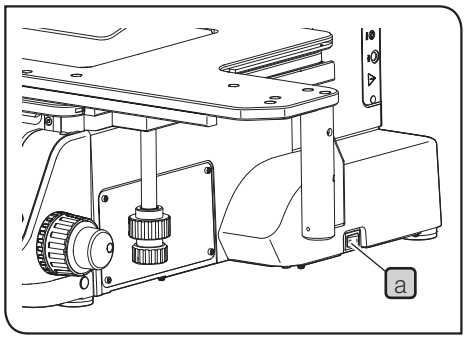

NOTE
- Cords are vulnerable when bent or twisted. Never subject them to excessive force.
- Set the main switch a to O (OFF) and connect the power cord.
- Always use the power cord provided by EVIDENT.

1 Insert the power cord connector b in the connector c.

CAUTION
- Connect the power cord to the grounded triplex outlet.
- If the outlet is not grounded, the electric safety performance intended by EVIDENT cannot be assured.

2 Connect the power cord's plug d to the power outlet e on the wall.

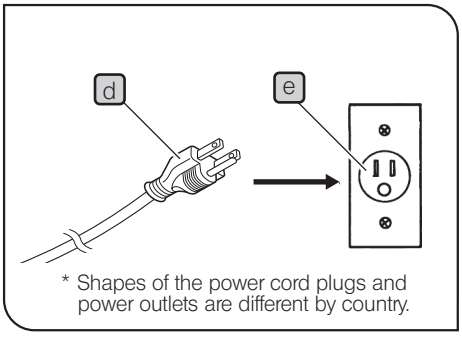

* Shapes of the power cord plugs and power outlets are different by country.

13 Use of the adjuster

The center of gravity changes depending on the sample weight, sample position or stage movement, etc. In particular, as MX63L uses a large-size stage, the center of gravity changes significantly. To prevent the microscope from unexpected overturning, adjust the adjuster at the bottom of the microscope to take the overturning prevention actions.

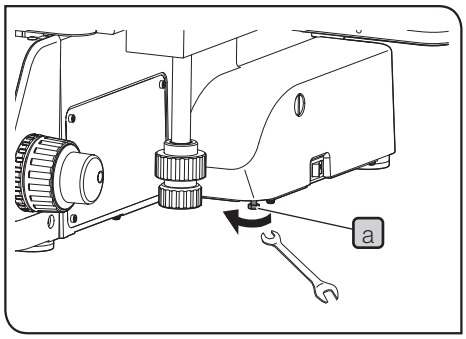

1 After all units are attached, use your tool (7 mm spanner, etc.) to rotate the adjuster (M4 hexagon head bolt) a placed at the bottom of the microscope in the arrow direction to lower it until it touches the installation surface. Then, rotate it for approx. half turn in the opposite direction of the arrow to raise the adjuster.

14 Seismic protection

In order to prevent the microscope from overturning in case of seismic, etc., use the L-shape fixture to take the reinforcement countermeasures.

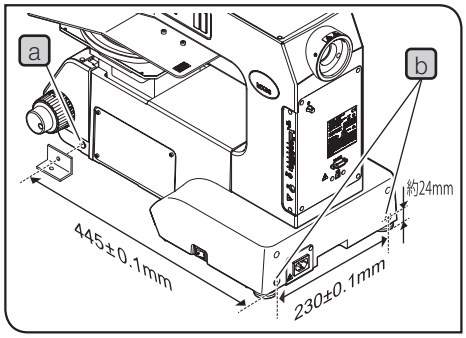

1 The screw holes (M5, depth 10 mm) for overturning prevention are provided on the side surface a (2 positions) and the back surface b (2 positions) of the microscope. Remove the caps from the screw holes and secure the L-shape fixture, etc. prepared by the customer, if necessary.

⚠CAUTION **When securing the L-shape fixture prepared by the customer to the microscope, be sure to use the steel bolts (strength category: 12.9) and make the thread section as long as possible. (8 mm or more is recommended).**

15 Centering of the aperture diaphragm of reflected light illumination

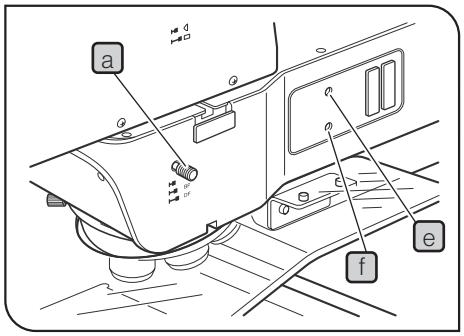

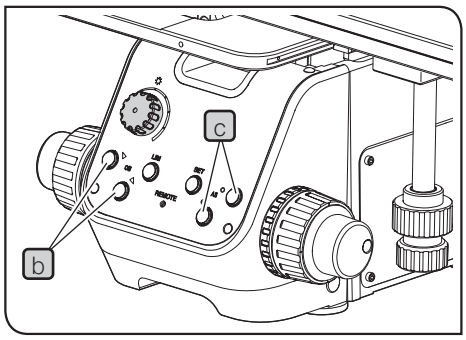

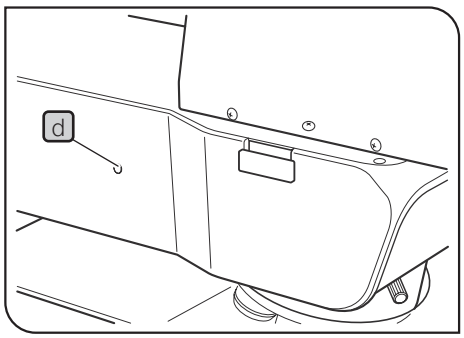

1. Set the observation light path selection knob a to the BF position.
2. Press the objective selection button b to engage the 10X objective in the light path and bring the sample into focus approximately.

TIP It is recommended to use a highly reflective sample, such as a mirror, etc. to facilitate observation of the aperture diaphragm image.

3. When you remove the eyepieces and look into the observation tube, you can see the aperture diaphragm image. Push the aperture diaphragm open/close button c to adjust so that the aperture diaphragm image becomes approximately 70% of the pupil of the objective. (as shown in the picture below)

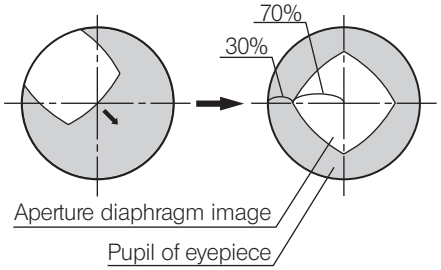

4. If the center of the aperture diaphragm is deviated, insert the Allen screwdriver provided with the microscope frame to loosen the aperture diaphragm clamping screw d (approximately one to two turns). Then, insert the Allen screwdriver in the aperture diaphragm centering screws e and f alternately and rotate them to center the aperture diaphragm.
5. Tighten the aperture diaphragm clamping screw d.

10-3 Connection with PC

To control this system from PC, PC must be connected to the microscope frame with the interface cable (USB cable or RS-232C cable). In addition, the application software to control this system must be installed on PC.

1 Connecting the interface cable

NOTE
- **Be sure to connect cables when the main switch of the microscope and the power supply of PC are turned OFF.**
- **Cables are vulnerable when bent or twisted. Never subject them to excessive force.**
- **Connect the cables in the correct orientation paying attention to the shape of the connector.**
- **You cannot connect PC to the microscope frame using both the USB cable and the RS-232C cable.**

Connecting the USB cable

1 Connect the connector of the USB cable to the USB 2.0 connector of PC.

NOTE **Some PCs are equipped with both USB 2.0 and USB 3.0 connectors. Be sure to connect the USB cable to the USB 2.0 connector. If it is connected to the USB 3.0 connector, the operations are not ensured. (For some USB 3.0 connectors, the color of the terminal part is blue or "SS" is printed on.)**

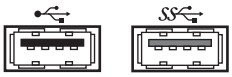

Connecting the RS-232C cable

1 Connect the connector of the RS-232C cable to the RS-232C connector of PC.

2 Start procedures / Exit procedures

Start procedures

1 Turn ON the power of PC and logon the operating system. Wait until the desktop appears.

2 Set the main switch of the microscope frame to I (ON).

3 Start the application software.

TIP The REMOTE indicator on the front panel turns ON in blue.

Exit procedures

1 Exit from the application software.

TIP The REMOTE indicator on the front panel turns OFF.

2 Shutdown the operating system.

3 Set the main switch of the microscope frame to O (OFF).

11 Maintenance parts

11-1 Maintenance parts list

Light source lamps

Lamp name	Model type	Average lifetime
Halogen bulb	12V100WHAL-L (long lifetime type) (made by PHILIPS Co. 7724l)	2,000 h
	12V100WHAL (high light intensity type) (made by PHILIPS Co. 7023)	100 h
Mercury burner	USH-103OL (made by Ushio Inc.)	300 h
Mercury burner for light guide light source	SHI-130OL (made by Ushio Inc.)	2000 h
Halogen bulb for light guide light source	JCR12V-100WB (made by Ushio Inc.)	1000 h

Filter

Filter name	Model type	Average lifetime
Reflected light band-pass filter for IR	U-BP1100IR / U-BP1200IR (made by EVIDENT)	500 h

Immersion oil

EVIDENT immersion oil IMMOIL-F30CC

11-2 List of chemicals used for maintenance

- EVIDENT immersion oil : IMMOIL-F30CC

  Obtain the Safety Data Sheet from the Website of EVIDENT Corporation.
- Absolute alcohol* (commercially-available product)
- Neutral detergent* (commercially-available product)

  * Obtain the Safety Data Sheet from the supplier where you purchased this commercially-available product.

12 Preventive inspection sheet for illumination devices

- We recommend performing “Preventive Inspections“ periodically (every time you replace lamps and at least once every 6 months).
- The table below identifies the check items to be observed. Put (X) if not applicable or ( ) if applicable.
- If there are any check marks, immediately stop using the product and request inspection to EVIDENT or replace with new illumination device(s).
- If you detect an abnormality other than those listed below or EVIDENT products other than illumination devices, also stop using the product and request inspection to EVIDENT.
- The repair, replacement and inspection that passed the warranty period are paid-services.

If you have any questions, please contact EVIDENT.

	Check results (Date)			
Check items	/	/	/	/
1. More than 8 years have passed since original purchase of the illumination device, or the total using time exceeds 20,000 hours of use.				
2. Light flickers when you move a lamp cable or illumination devices. (only when using the halogen bulb)				
3. Dirt or substances are attached around the main switch.				
4. The light flickers if you move a lamp cable or illumination devices.				
5. Lamp cable is unusually hot to the touch.				
6. Burning or smoke odor.				
7. The light still flickers even though the lamp is replaced. (only when using the halogen bulb)				
8. Signs of deformation, backlash, or looseness, etc. when you assemble/ disassemble the illumination device. (i.e. it is hard to open/close the lid during lamp-replacement.)				
9. Illumination device has become deformed, cracked or tarnished in any way. Or the colors of the right and left are different. (only when using the halogen bulb)				
10. Illumination device/ housing has become deformed, cracked or tarnished in any way.				
11. Lamp cables or wiring parts have become deformed, cracked or tarnished in any way.				
12. Frequent repairs to similar devices put into use at the same time as the unit being checked.				

* If the spaces are not enough for check , copy this sheet.

13 Proper selection of the power supply cord

If no power supply cord is provided, please select the proper power supply cord for the equipment by referring to "Specifications" and "Certified Cord" below:

Caution : In case you use a non-approved power supply cord for EVIDENT products, EVIDENT can no longer warrant the electrical safety of the equipment.

Specifications

Voltage rating	125 V AC (for 100-120 V AC area) or, 250 V AC (for 220-240 V AC area)
Current rating	6 A minimum
Temperature rating	60 ˚C minimum
Length	3.05 m maximum
Fittings configuration	Grounding type attachment plug cap. Opposite terminates in molded-on IEC configuration appliance coupling.

Table 1 Certified cord

A power supply cord should be certified by one of the agencies listed in Table 1 , or comprised of cordage marked with an agency marking per Table 1 or marked per Table 2. The fittings are to be marked with at least one of the agencies listed in Table 1. In case you are unable to buy locally the power supply cord which is approved by one of the agencies mentioned in Table 1, please use replacements approved by any other equivalent and authorized agencies in your country.

Country	Agency	Certification mark	Country	Agency	Certification mark
Argentina	IRAM		Italy	IMQ	
Australia	SAA		Japan	JET	
Austria	ÖVE		Netherlands	KEMA	
Belgium	CEBEC		Norway	NEMKO	
Canada	CSA		Spain	AEE	
Denmark	DEMKO		Sweden	SEMKO	
Finland	FEI		Switzerland	SEV	
France	UTE		United Kingdom	ASTA BSI	,
Germany	VDE		U.S.A.	UL	
Ireland	NSAI				

Table 2 HAR flexible cord

Approval organizations and cordage harmonization marking methods

Approval organization	Printed or embossed harmonization marking (May be located on jacket or insulation of internal wiring)		Alternative marking utilizing black-red-yellow thread (Length of color section in mm)		
			Black	Red	Yellow
Comite Electrotechnique Belge (CEBEC)	CEBEC	‹HAR›	10	30	10
Verband Deutscher Elektrotechniker (VDE) e.V. Prüfstelle	‹VDE›	‹HAR›	30	10	10
Union Technique de l´Electricite´ (UTE)	USE	‹HAR›	30	10	30
Instituto Italiano del Marchio di Qualita´ (IMQ)	IEMMEQU	‹HAR›	10	30	50
British Approvals Service for Electric Cables (BASEC)	BASEC	‹HAR›	10	10	30
N.V. KEMA	KEMA-KEUR	‹HAR›	10	30	30
SEMKO AB Svenska Elektriska Materielkontrollanstalter	SEMKO	‹HAR›	10	10	50
Österreichischer Verband für Elektrotechnik (ÖVE)	‹ÖVE›	‹HAR›	30	10	50
Danmarks Elektriske Materialkontroll (DEMKO)	‹DEMKO›	‹HAR›	30	10	30
National Standards Authority of Ireland (NSAI)	‹NSAI›	‹HAR›	30	30	50
Norges Elektriske Materiellkontroll (NEMKO)	NEMKO	‹HAR›	10	10	70
Asociacion Electrotecnica Y Electronica Espanola (AEE)	‹UNED›	‹HAR›	30	10	70
Hellenic Organization for Standardization (ELOT)	ELOT	‹HAR›	30	30	70
Instituto Portages da Qualidade (IPQ)	np	‹HAR›	10	10	90
Schweizerischer Elektro Technischer Verein (SEV)	SEV	‹HAR›	10	30	90
Elektriska Inspektoratet	SETI	‹HAR›	10	30	90

Underwriters Laboratories Inc. (UL)	SV, SVT, SJ or SJT, 3 X 18AWG
Canadian Standards Association (CSA)	SV, SVT, SJ or SJT, 3 X 18AWG

Appendix: Units attached by EVIDENT

The units described below must be assembled and adjusted by EVIDENT.

If these units are assembled or adjusted by the customer, the operations are not ensured.

1 Transmitted light illumination unit (MX-TILLA/MX-TILLB)

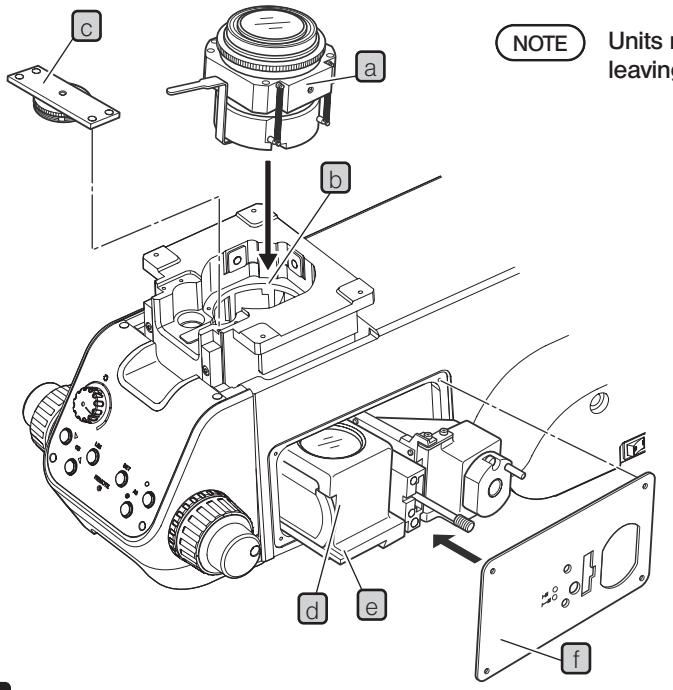

NOTE **Units must be attached carefully to prevent them from leaving fingerprints or scratches.**

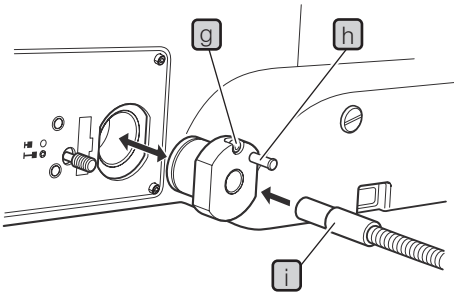

1. Remove the stage.
2. Insert the provided hexagon socket head cap screws (3 x 25) into four screw holes on the condenser a putting the washer between, and insert the condenser downward into the opening b of the focusing unit so that it faces the front (i.e. the AS lever or shutter comes to the front).
3. Place the condenser by pushing it toward left and back sides when looking at the microscope from the front, and tighten the four hexagon socket head cap screws (3 x 25) using the Allen wrench (2.5 mm). The attaching of the A type is completed.
4. For the B type, secure the interlock section c of the condenser height adjustment ring temporarily by inserting the provided hexagon socket head cap screws (3 x 5) into four screw holes on the front of the focusing unit using Allen wrench (2.5 mm). Then, secure the interlock section at the position where the gear interlocks smoothly.
5. Loosen the hexagon socket head cap screws (3 x 6) of the cover plate on the right of the base using the Allen wrench (2.5 mm), and remove the cover plate.
6. Raise the focusing unit to the upper limit, align the dovetail groove e of the illuminator unit d with the internal dovetail, insert it until it touches the end, and tighten the clamping screws of the internal dovetail using the Allen screwdriver. In addition, to prevent loosening the condenser, screw in the provided hexagon socket head flat point set screws (5 x 6) over the clamping screws. (using Allen wrench (2.5mm))
7. Secure the illuminator unit cover f using the hexagon socket head cap screws (3 x 6) provided with the microscope frame so that the spaces of the openings are uniform with respect to the protruded part of the illuminator unit d.
8. Loosen the clamping screw g of the light guide holder, and pull out the light guide holder by holding the knob h.
9. Insert the light guide i and secure the clamping screws on the side.
10. Attach the light guide holder at the original position and secure the clamping screw g.

2 Setting the OP light path

If you need to attach the reflected light filter, attach it together with this setting. (See next page.)

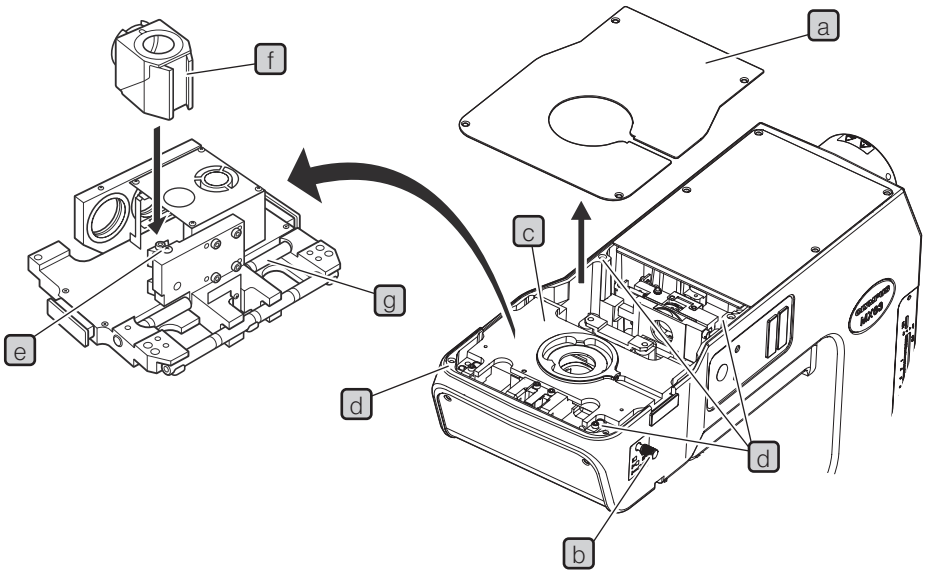

1. Loosen the clamping screws on the top cover a using the Allen screwdriver (2 mm) to remove the top cover.
2. Rotate the observation light path selection knob b counterclockwise to remove it. (This selection knob should be retained by the user because it will be reused when restoring the light path switching stroke to the original setting.)
3. Remove the hexagon socket head cap screws (4 x 16) d (4 positions) of the observation light path unit c using the Allen wrench (3 mm), and place the unit c upside down.
4. Loosen the mirror unit clamping screw e using the Allen screwdriver, insert the desired mirror unit f into the mount dovetail (so that the product name on the side of the unit is upside down), and tighten the clamping screw e.
5. Remove the screw g that limits the light path selection stroke using the Allen wrench (3 mm). (This screw should be retained by the user because it will be reused when restoring the light path switching stroke to the original setting.)
6. Return the observation light path unit c to the original position and secure it, and also secure the top cover a.

NOTE **Be sure to use the Allen wrench (3 mm) to secure the observation light path unit c. Do not use the Allen screwdriver.**

7. Screw the provided longer light path selection knob firmly into the b position.

3 Attaching the reflected light filter (26ND0.5)

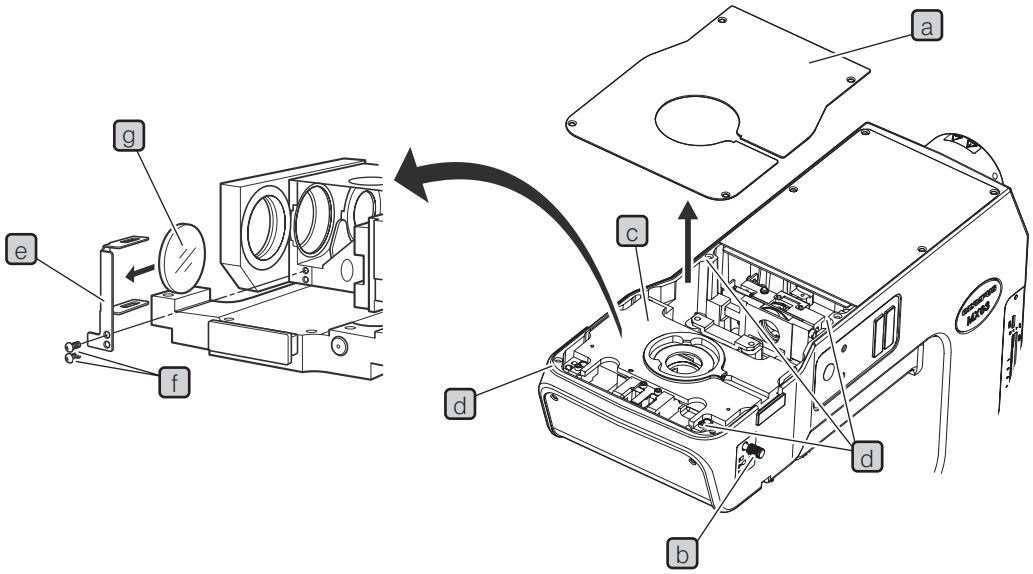

1. Loosen the clamping screws on the top cover a using the Allen screwdriver (2 mm) to remove the top cover.
2. Rotate the observation light path selection knob b counterclockwise to remove it. (This selection knob should be retained by the user because it will be reused when restoring the light path switching stroke to the original setting.)
3. Remove the hexagon socket head cap screws (4 x 16) d (4 positions) of the observation light path unit c using the Allen wrench (3 mm), and place the unit c upside down.
4. Remove the screws f (2 positions) that clamp the filter frame e using the Phillips screwdriver and remove the filter frame e.
5. Insert the filter g into the filter holding slit (long slit) of the filter frame.

TIP The filter frame is slightly deformed toward outside, but this is normal.

6. Secure the filter frame e at the original position.

4 Attaching the focus aid (MX-FA)

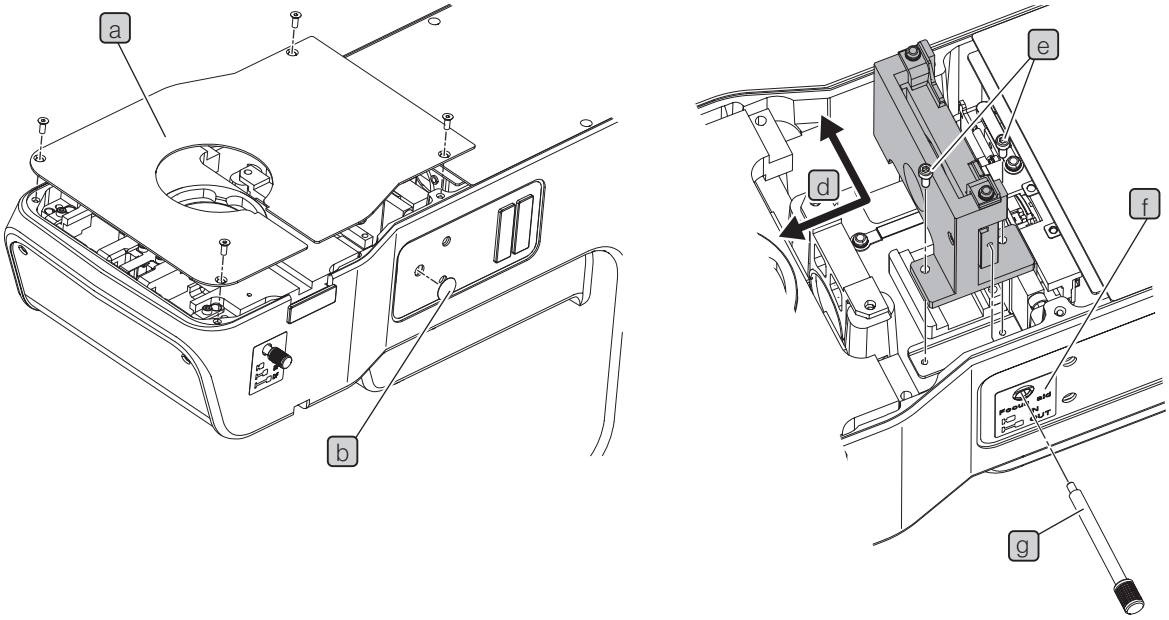

1. Loosen the clamping screws on the top cover a using the Allen wrench (2 mm) to remove the top cover.
2. Peel off the sticker b of the focus aid knob insertion slot.
3. Push the focus aid unit in back-left direction (arrow direction d in the picture) facing from the right side of the microscope, and secure it using the clamping screws e (2 positions).
4. Clean the place to attach the sticker f for focus aid on the side panel using the cleaning paper, etc. moistened with absolute alcohol, and attach the sticker using the mount hole as a guide.
5. Insert the focus aid knob g from the insertion slot and rotate clockwise to attach it.
6. Attach the top cover.

Manufactured by

EVIDENT CORPORATION

6666 Inatomi, Tatsuno-machi, Kamiina-gun, Nagano 399-0495, Japan

Distributed by

EVIDENT EUROPE GmbH

Caffamacherreihe 8-10, 20355 Hamburg, Germany

EVIDENT EUROPE GmbH UK Branch

Part 2nd Floor Part A, Endeavour House, Coopers End Road, Stansted CM24 1AL, U.K.

EVIDENT SCIENTIFIC, INC.

48 Woerd Ave Waltham, MA 02453, U.S.A.

EVIDENT AUSTRALIA PTY LTD

97 Waterloo Road, Macquarie Park, NSW 2113, Australia

Life science solutions

Service Center

https://www.olympus-lifescience.com/support/service/

Official website

https://www.olympus-lifescience.com

Industrial solutions

Service Center

https://www.olympus-ims.com/service-and-support/service-centers/

Official website

https://www.olympus-ims.com

AX8974 06 Issued in March, 2023