INSTRUCTIONS

IPLEX GAir

INDUSTRIAL ENDOSCOPE

IV9000GA
IV98200GA
IV98300GA

Industrial Endoscope

MM3868 07 Issued in June, 2023

Manufactured by

EVIDENT CORPORATION

6666 Inatomi, Tatsuno-machi, Kamiina-gun, Nagano 399-0495, Japan

Distributed by

EVIDENT EUROPE GmbH

Caffamacherreihe 8-10, 20355 Hamburg, Germany

EVIDENT EUROPE GmbH UK Branch

Part 2nd Floor Part A, Endeavour House, Coopers End Road, Stansted CM24 1AL, U.K.

EVIDENT SCIENTIFIC, INC.

48 Woerd Ave Waltham, MA 02453, U.S.A.

EVIDENT AUSTRALIA PTY LTD

97 Waterloo Road, Macquarie Park, NSW 2113, Australia

Life science solutions

Service Center

https://www.olympus-lifescience.com/support/service/

Official website

https://www.olympus-lifescience.com

Industrial solutions

Service Center

https://www.olympus-ims.com/service-and-support/service-centers/

Official website

https://www.olympus-ims.com

Contents

Introduction 1
Intended use 1
Instruction manual 1
Product configuration 1

Safety precautions 2
Safety precautions - General safety precautions - 2
Safety precautions - Battery precautions - 10
Safety precautions - External battery precautions - 13
Safety precautions - Illumination light precautions - 16

Rating plate / Caution plate 18

1. Unpacking 21
1.1 Unpacking 21
1.1.1 Storing in the optical adapter case 21
1.1.2 Options 22

2. Nomenclature 24
2.1 Nomenclature 24
2.2 Distal end / Optical adapter nomenclature 27
2.3 LCD monitor nomenclature 28

3. Pre-operation preparation and inspection 38
3.1 Transporting the case 38
3.2 Preparing the product 39
3.2.1 Removing the units from the carrying case 39
3.2.2 Removing the scope unit from the scope case 41
3.2.3 Attaching the scope unit 41
3.2.4 Attaching and removing the relay cable 43
3.2.5 Attaching and removing the base unit 46
3.3 Preparing the power supply 49
3.3.1 Using the battery 49
3.3.2 Using the external battery 50
3.3.3 Using the AC adapter 53
3.4 Attaching and removing the optical adapter 54
3.5 Inserting and removing the SDHC card or the microSDHC card 56
3.6 Attaching and removing the remote control unit 57

3.7 Attaching and removing the guide head 57
3.8 Connecting and disconnecting the USB wireless LAN adapter 60
3.9 Attaching and removing the pole unit 61
3.10 Attaching and removing the push rod adapter 63
3.11 Attaching and removing the centering device 63
3.12 Pre-operation / Post-operation inspections 68

4. Basic operation 71
4.1 Turning ON the power 71
4.1.1 Turning ON the power 71
4.1.2 Selecting an optical adapter 72
4.2 Checking the remaining battery level and the remaining external battery level 73
4.3 Turning ON the illumination 74
4.3.1 Checking the lighting of the illumination at the distal end of the insertion tube 74
4.4 Operating the instrument 76
4.5 Observing the inspection object 79
4.6 Adjusting the display of the live image 82
4.6.1 Still image (Freeze) 82
4.6.2 Enlarging the image (Zoom) 82
4.6.3 Adjusting the brightness 82
4.7 Switching the folder on the live screen 83
4.8 Recording images 84
4.8.1 Preparation for recording images 84
4.8.2 Recording the still image 85
4.8.3 Recording the movie 87
4.8.4 Adding the movie 89
4.9 Playing back the image 89
4.9.1 Playing back an image in a full-screen view (View screen) 90
4.9.2 Displaying the thumbnail screen and selecting the played back image 91
4.9.3 Sound attached to the still image 93
4.9.4 Playing back and pausing the movie 93
4.10 Using the constant video 93
4.10.1 Preparation before recording the constant video 93
4.10.2 Recording a constant video 94
4.10.3 Playing back a constant video 94
4.10.4 Saving the constant video in an SDHC card 94
4.10.5 Deleting the constant video 94

4.11 Displaying live images on the external monitor 95
4.12 Displaying live images on the mobile terminal 95
4.12.1 Connecting the USB wireless LAN adapter 95
4.12.2 Enabling the USB wireless LAN adapter from the menu 96
4.13 Using recorded images on a PC 96
4.14 Displaying the gravity direction 96
4.15 Rotating the live images automatically 97
4.16 Displaying the insertion length 98
4.17 Detecting when pulling out the bent angulation section 102

5. Menu operations and functions 103
5.1 Menu operations 103
5.2 Using the live screen or freeze screen 105
5.2.1 Initial setting menu 105
5.2.2 Inputting a title 111
5.2.3 Registering a text string as a preset title 113
5.2.4 Adjusting the image sharpness 114
5.2.5 Adjusting the image color 114
5.2.6 DATE and TIME 115
5.2.7 LANGUAGE 115
5.3 Using the thumbnail screen or the view screen 115
5.3.1 File/folder operation menu 115

6. Measurement functions 118
6.1 Scaler measurement function 118
6.1.1 Scaler measurement 118
6.1.2 Scaler measurement screen 118
6.1.3 Using scaler measurement 120

7. Remote operation 121
7.1 Configuration example 1 121
7.2 Configuration example 2 122

8. Troubleshooting 123
8.1 Troubleshooting guide 123
8.1.1 Error messages 123
8.1.2 Common problems 126
8.2 Requesting repair of this product 129

9. Storage and maintenance 130
9.1 Replacing the battery or the external battery 130
9.2 Replacing the O-ring 130
9.3 Cleaning components 130
9.3.1 Cleaning the insertion tube 130
9.3.2 Cleaning the distal end 130
9.3.3 Cleaning the optical adapter 131
9.3.4 Cleaning the LCD monitor 132
9.3.5 Cleaning the centering device or the guide head 132
9.3.6 Cleaning other units 132
9.4 Removing water from the drain 132
9.5 Replacing the fuse 134
9.6 Storing in the case 135
9.6.1 Storing in the carrying case 135
9.6.2 Storing the scope unit in the scope case 137

10. Specifications 140
10.1 Operating environment 140
10.2 Storage environment 141
10.3 Other specifications 141
10.3.1 Other specifications 141
10.3.2 External application standard 145
10.3.3 Software license information 146
10.3.4 Using open source software 146
10.3.5 AVC Patent Portfolio License 147
10.4 Optical adapter specifications 147

Appendix 150
System chart 150

Introduction

Intended use

This instrument is intended for inspecting and observing the interior of machinery, equipment, materials, and other objects, without damaging the object being inspected.

Instruction manual

This instruction manual contains the information to understand the operations and handling method of this instrument and to use this instrument safely.

Before using the instrument, carefully read the contents of this instruction manual to ensure that you use the instrument correctly. After reading this instruction manual, store it together with the warranty agreement in a safe place.

If you have any questions about any information in this instruction manual, please contact us.

The symbols used in the texts of this manual have following meanings:

[ ] indicates the words on the user interface of the product displayed in English.

< > indicates the words on the user interface of the product and the language displayed is selectable by user settings.

Product configuration

For the configuration of devices required by this instrument and devices that can be used in combination with it, see "System chart" (page 150) in "Appendix".

Note that use of this instrument in combination with options or separately available items other than "System chart" does not only create the risk of abnormal operations but it may also damage the device.

Safety precautions

Note that use of this instrument in ways that are not specifically described in this instruction manual does not ensure the safety and it may also cause the malfunction of this instrument. Be sure to follow this instruction manual when using this instrument.

The following symbols are used throughout this instruction manual.

⚠DANGER:

Indicates an imminently hazardous situation which, if not avoided, will result in death, serious injury or damage of inspection object.

⚠WARNING:

Indicates a potentially hazardous situation which, if not avoided, could result in death, serious injury or damage of inspection object.

⚠CAUTION:

Indicates a potentially hazardous situation which, if not avoided may result in minor or moderate injury or potential material damage. It may also be used to alert against unsafe practices or potential material damage.

NOTE:

Indicates a potential situation which, if not avoided, may result in failure of this instrument.

TIP:

Indicates additional helpful information.

Safety precautions - General safety precautions -

Comply strictly with the precautions described below when handling this instrument. The information is supplemented by dangers, warnings and cautions given in each chapter. The safety cannot be ensured when the instrument is used in ways that are not specifically described.

⚠DANGER:

Never use the instrument for observing inside of the human or animal cavity.
Otherwise, death or the serious injury of the person or animal may result.

Never use the instrument in the following environments.

- Where flammable atmospheres are present
- Where metal dust or other dust is present

Otherwise, an explosion or fire may result.

⚠**WARNING:**

Do not repair, disassemble or remodel the instrument.
Never repair, disassemble or remodel the instrument. Otherwise, the injury of human bodies or the damage of the instrument may result. Only personnel who are authorized by we are allowed to repair the instrument. We are not liable for any accidents or instrument damage that occurs as a result of repairs attempted by personnel who are not authorized by us.

Stop using the instrument immediately at the first sign of heat, smoke, abnormal odor, abnormal noise or any other abnormality.
Even if the instrument is still operable, turn OFF the power.

Do not insert the insertion tube into an inspection object that is in operation or conducting electricity.
Otherwise, the insertion tube may be damaged by being caught inside of the inspection object, etc., or the insertion tube may touch the object, which results in electric shock.

Before storing the instrument in its carrying case, be sure to turn OFF the power and remove the battery and/or the external battery.
Leaving the battery and/or the external battery loaded during storage causes it to be hot, which may cause fire.

The gas tube must not be used for grounding.
Otherwise, it may cause an explosion.

⚠**CAUTION:**

Do not use the instrument in any environment (including strongly radioactive environments) other than the specified operating environment.
Using the instrument even in weakly radioactive environment may deteriorate the performance of the instrument.
For the influence of the radiation dosage given to the instrument, contact us.

Do not use this instrument near the strong electromagnetic radiation source.
The proper operations may be interfered. Check the electromagnetic environment before using this instrument.

Note the following precautions when moving this instrument to or using it at an elevated location.

- Conduct a prior inspection
- Take measures to prevent the instrument from falling off
- Implement thorough safety measures

Pay careful attention to the temperature of the distal end and the insertion tube right after using this instrument in high temperature environments as the temperature does not cool down immediately.
Otherwise, you may get burned.

⚠**CAUTION:**

Do not touch the edge *(A)* inside the drum rotator.
Otherwise, you may get injured by the edge.

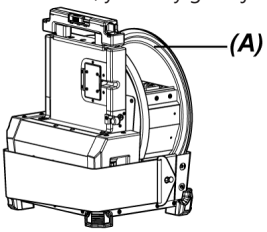

Do not rotate the drum by holding the parts other than the drum rotation handle.
Otherwise, you may get injured.

Pay attention not to trip over the relay cable, power cord or cables of the insertion tube.

Do not use commercially-available electronic transformers for overseas travel use (travel converters).

Use only the power cord and the AC adapter specified by us and connect the power cord to the power outlet within the rated range.
Otherwise, smoke, fire, or electric shock may occur.

Always connect the ground terminal.
Connect the ground terminal of the power cord and that of the power outlet. If the product is not grounded, our intended electric safety and EMC performance of the product cannot be assured.

Do not use the power cord specified for this instrument for other products.

Do not use the AC adapter outdoors.
Otherwise, electric shock, smoke or fire may occur, which may cause damage to the instrument.

The AC adapter is designed for indoor use.

Do not apply a strong impact to the AC adapter by hitting it against the wall or dropping it to the floor, etc.
Otherwise, the malfunction or damage may be caused and result in electric shock.

If you sense any abnormality while inserting the insertion tube into the inspection object, do not attempt to insert it forcibly any more but carefully pull out the insertion tube.
Note the following when pulling out the insertion tube.

- Do not pull out the insertion tube from the inspection object while the angulation section is bent.
- If the insertion tube is caught on something during pulling it out, rotate the insertion tube gently while continuing to pull out.

⚠CAUTION:

Note the following precautions when handling the distal end of the insertion tube.

- Do not drop the optical adapter or subject it to strong impact.
- Do not subject the distal end to severe impact or pulling.
- Do not move by holding the distal end.
- Do not use this instrument if the O-ring of the distal end is damaged or torn.
- Do not subject the angulation section to strong pressure or bending.

Otherwise, the glass lenses and the precision components which constitute the distal end and the angulation section may be damaged.

Always attach the optical adapter before using this instrument.
If you use the instrument without attaching the optical adapter to the insertion tube, parts (screws, etc.) are easily deformed due to contact with hard objects, etc. If the insertion tube parts are deformed, the optical adapter cannot be attached or may fall off.

Never use the optical adapter if any of its parts are loose.
Otherwise, the loose parts may fall off.

If the optical adapter cannot be attached or removed because the nut does not rotate, stop using it.
Contact us.

⚠CAUTION:

If abnormality is found in the observation image, stop using immediately and pull out the insertion tube from the inspection object carefully.
If the optical adapter is about to fall off from the distal end of the insertion tube while inserting the insertion tube into the inspection object, the illumination turns OFF. (The LED icon (ON/ECO) of the LCD monitor is hidden.)

If the guide head is about to fall off from the distal end of the insertion tube while inserting the insertion tube into the inspection object, a part of the view may be lost.

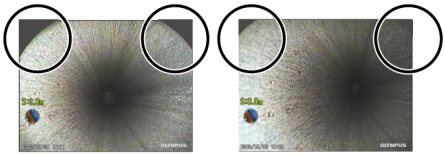

Continued use in this condition may cause the optical adapter or the guide head to fall off from the distal end of the insertion tube. In this case, pull out the insertion tube carefully from the inspection object and attach the optical adapter or the guide head firmly again according to "Attaching and removing the optical adapter" (page 54) or "Attaching and removing the guide head" (page 57).

If you sense any abnormality while performing the angulation operation, do not attempt to force the angulation operation.
Otherwise, the insertion tube or the inspection object may be damaged.

Do not allow metal or other foreign objects to enter the product through connector terminals or any other openings.
Otherwise, the malfunction or electric shock may result.

Do not use the parts other than the insertion tube underwater, clean them under running water or splash water on them.
Otherwise, water creates the risk of electric shock. Do not use or store the instrument in an environment where it is submerged in water.

The remote control unit is a high-sensitivity parts. Discharge it before use.
Otherwise, the malfunction may be caused due to static electricity, etc.
(Caution plate position: See "Caution" on page 18)

⚠**CAUTION:**

Do not subject the LCD monitor to strong impact, strong pressure or to scratching by a hard or pointed object.
Otherwise, the LCD monitor may be cracked or scratched, or the damaged monitor may cause personal injury.

When pushing down the handle, be careful not to get your hand or other objects caught in between.

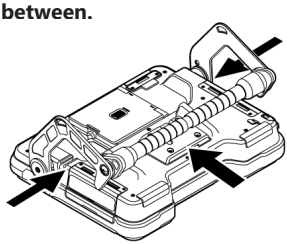

Use the SDHC card or the microSDHC card to record images.
This instrument comes with an SDHC card.

Do not remove the battery or external battery, or AC adapter while accessing to the SDHC card or the microSDHC card.
Otherwise, the recorded data may be damaged.

Do not remove the SDHC card or the microSDHC card while recording or replaying the image.
Otherwise, recorded data, SDHC card or microSDHC card may be damaged.

Do not repeat inserting or removing the SDHC card or the microSDHC card continuously.
Otherwise, recorded data, SDHC card or microSDHC card may be damaged or may not function properly.

Be careful for followings when using the extendable handle of the carrying case.

- Do not get your hand caught when storing the handle inside the case.
- Do not attempt to lift the case by holding the extendable handle.

NOTE:

Do not store the instrument in the following locations.

- Environments exposed to high temperature, high humidity and large amounts of dust or particulate
- Locations exposed to direct sunlight or radiation
- Locations exposed to gas containing halide*1

Otherwise, the instrument may be damaged.

***1 The performance of some electrical parts may deteriorate due to the halide in insecticides, pesticides and gaseous extinguishing agents, etc.**

Do not continue to use the instrument when it is wet with condensation.
In case of a sudden temperature change, such as entering a warm room from cold outside, condensation may be caused inside the instrument. Using the instrument while it is wet with condensation may cause malfunction. If condensation occurs, turn OFF the power, leave the instrument in the environment where it will be used and allow the condensation to dry before using it.

Do not insert the insertion tube into the inspection object which is in an environment that exceeds the operating temperature range.
The continued use may damage or deteriorate the performance of the instrument.

Do not use the instrument if the contaminants are attached to the outer surface of the instrument.
The instrument may be damaged or the performance may be deteriorated.

Do not cover the product with a plastic bag or other objects.
The inside of the instrument may not be cooled down sufficiently, which may damage the instrument.

Do not allow any liquids other than water, saltwater, machine oil or diesel oil to be attached to the insertion tube.
Otherwise, the insertion tube may be damaged.

Note the following precautions when handling the battery door, interface door, SD card door and relay cable door.

- Do not open or close doors when water or other liquid is attached to the relay cable or around doors.
- Do not open or close doors with your wet hands.
- Do not open or close doors in the area exposed to high humidity and/or dust.
- Close doors when storing the instrument and when the terminals are not in use.

Note the following precautions with regard to the terminals on this instrument.

- Do not touch the terminals directly with your hands.
- Prevent dirt and water droplets from coming in contact with the terminals.

NOTE:

Be careful not to allow scattered water droplets to come in contact with the terminals.
Be careful not to allow scattered water droplets to come in contact with each terminal of the AC adapter, relay cable, drum unit, scope unit or base unit.

Otherwise, the instrument may be damaged.

Note the following precautions when taking out the instrument from the carrying case and scope case.

- Do not lift and pull the insertion tube.

The instrument may be damaged.

Do not pull the insertion tube and other cables with force or carry them around.

Note the following precautions when storing this instrument in the carrying case or the scope case.

- Make sure that the distal end has cooled down sufficiently before storing it.
- Make sure that the insertion tube is not twisted before storing it.

Do not lift the carrying case or the scope case while the cover is open.

Bundle the cable of the remote control unit with the cable tie as shown in the picture below.
When bundling the cable of the remote control unit, do not wrap the cable around the remote control unit. The excess force may be applied to the cable and it may be damaged.

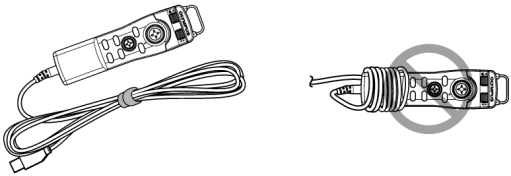

Note the following precautions when using the guide head.

- Never use the guide head if any of its parts are loose.
  The loose parts may fall off during operation.
- Do not insert the insertion tube into the locations described below.
  - Location with steps such as outlet or connection part of pipe
  - Location with protrusions
  - Location where you feel too tight to insert the insertion tube
- Keeping in mind that the insertion tube should be pulled out later, do not insert it forcibly.
  If you insert the insertion tube into the elbow joints or the curved pipe, or insert it forcibly into inspection objects, the insertion tube may not be pulled out.
- If you feel that something is caught while pulling out the insertion tube, do not pull it out forcibly, but pull it out gently by moving it back and forth.

NOTE:

Note the following precautions when using the push rod adapter.

- Never use the push rod adapter if any of its parts are loose.
  The loose parts may fall off during operation.
- Do not insert the insertion tube into the locations described below.
  - Curved pipe
  - Location with steps such as outlet or connection part of pipe
  - Location with T-shape joints, elbow joints or protrusions
  - Location where you feel too tight to insert the insertion tube
- Keeping in mind that the insertion tube should be pulled out later, do not insert it forcibly.
  If you insert the insertion tube forcibly, the insertion tube may not be pulled out.
- If you feel that something is caught while pulling out the insertion tube, do not pull it out forcibly, but pull it out gently by moving it back and forth.

Note the following precautions when using the centering device.

- Never use the centering device if any of its parts are loose.
  The loose parts may fall off during operation.
- Do not insert the insertion tube into the locations described below.
  - Location with steps such as outlet or connection part of pipe
  - Elbow joints
  - Location inside the pipe with protrusions or the curved pipe where the centering device cannot be inserted
  - Location where you feel too tight to insert the insertion tube
- Keeping in mind that the insertion tube should be pulled out later, do not insert it forcibly.
  If you insert the insertion tube forcibly, the insertion tube may not be pulled out.
- If you feel that something is caught while pulling out the insertion tube, do not pull it out forcibly, but pull it out gently by moving it back and forth.

When disposing of this product, be sure to do so in accordance with all local laws, rules and regulations.

Safety precautions - Battery precautions -

If you experience any problems when using this instrument with batteries, contact us.

Comply strictly with the precautions described below when handling the battery. If the batteries are handled improperly, the battery fluid leakage, excessive heat generation, smoke, battery burst, electric shock and/or burns may result.

Before use, thoroughly read the instruction manual provided with the battery charger to fully understand the information contained in them, and observe their instructions during use.

In this manual, the Li-ion battery to be attached to the drum unit is called “Battery”, and the Ni-MH battery to be attached to the external battery case is called “External battery”.

⚠DANGER:

Use the battery NP-9X or NP-L7S and charge the battery using the battery charger JL-2PLUS.

Do not subject the battery to strong impact.

Do not allow terminals to be short circuited with metal objects.
In particular, do not store external batteries in the carrying case when transporting the instrument.

Do not throw the battery into fire or subject it to heat.

Do not open or modify the battery.

Do not use the battery charger outdoors.
Otherwise, the electric shock, smoke or fire may occur, which may cause the damage to the battery charger. The battery charger is designed for indoor use.

⚠WARNING:

Do not cover the battery charger with clothing, bedding or other materials while charging.

When the charging is complete, always unplug the power plug of the battery charger from the power outlet.

If you sense heat generation, abnormal odor, abnormal noise, smoke, or any other abnormality in battery charger, unplug the power plug of the battery charger immediately and stop using it.
Contact us.

If the battery charger does not complete recharging the battery in the specified recharging time, stop attempting to recharge the battery.

Do not allow the battery compartment to become deformed and never put any foreign object into it.

Do not allow metal or water, or any other fluid to get into the battery compartment or onto the battery terminals.
If any foreign object enters the drum unit, remove the battery and disconnect the AC adapter, and immediately contact us.

Do not remove the battery immediately if the instrument was used continuously for a long time.
The heat generated by the battery causes the risk of burn injury.

Do not touch the battery terminals with your wet hands.

If you plan not to use the instrument for a long time, remove the battery from the drum unit and store it in a dry place.
If you do not use the battery, remove it from the drum unit and store it.

Otherwise, the battery fluid may leak and the heat generation may result in a fire or injury.

Keep the battery out of the reach of small children.

If liquid leaking from the battery comes into contact with your body, rinse it off immediately with clean water from the tap, etc. and seek medical attention if necessary.

⚠**CAUTION:**

If you are experiencing problems in inserting the battery, do not attempt to insert it forcibly.
Check the orientation of the battery and check the terminals for abnormalities. Attempting to insert the battery forcibly into the compartment may cause malfunction.

If you are experiencing problems removing the battery from the drum unit, do not attempt to remove it forcibly.
Contact us.

Contact the airlines in advance if you plan to transport the battery by aircraft.

When replacing the battery, do not repeat inserting or removing it rapidly.
Otherwise, the power may not be turned ON.

Do not store the battery in the following locations.

- Environments exposed to water, high temperature, high humidity, low humidity and dust
- Locations exposed to direct sunlight or radiation
- Locations exposed to gas containing halide*1

*1 The performance of some electrical parts may deteriorate due to the halide in insecticides, pesticides and gaseous extinguishing agents, etc.

Do not use, charge or store the battery in areas exposed to direct sunlight, in a closed automobile in the sun, or near a heater, etc.

Do not use a battery if it shows any irregularity such as fluid leakage, discoloration, deformation, abnormal odor or other abnormality.

Do not immerse the battery in fresh water or sea water, or allow the battery to get wet.

When disposing of a battery, be sure to do so in accordance with all local laws, rules, and regulations.

NOTE:

- The contamination of battery terminals with sweat or oil will cause the contact failure. If the battery is dirty, wipe it with a dry cloth before use.
- Use the battery correctly. If the battery is used incorrectly, battery fluid leakage, heat generation or damage may result. Insert the battery in the correct orientation when replacing it.
- The sticker showing “DO NOT USE” is attached on the base unit. Do not peel it off.
- Temperature range for battery operation
    - Discharge (when using this instrument): -15 °C to 48 °C
    - Charging : 0 °C to 40 °C
    - Storage : -20 °C to 60 °C (Recommended: 20 °C)

  Using the battery under a temperature exceeding the temperature ranges described above will result in degradation of its performance and service life. Before storing the instrument, be sure to remove the battery from the drum unit.
- The remaining battery level may be different from that of the battery indicator displayed on the LCD monitor depending on operating environments.

Safety precautions - External battery precautions -

If you experience any problems when using this instrument with external batteries, contact us.

Comply strictly with the precautions described below when handling the external battery. If the external batteries are handled improperly, the external battery fluid leakage, excessive heat generation, smoke, battery burst, electric shock and/or burns may result.

Before use, thoroughly read the instruction manual provided with the battery charger to fully understand the information contained in them, and observe their instructions during use.

In this manual, the Li-ion battery to be attached to the drum unit is called “Battery”, and the Ni-MH battery to be attached to the external battery case is called “External battery”.

⚠DANGER:

Use the external battery case MAJ-2485.

Use the external battery recommend by us described below.

- Single shape NiMH battery complied with IEC62133-1
- Temperature range: Sufficiently wider than the temperature range of external battery case (0 °C to 48 °C) is recommended.
- Storage capacity: 10,000 mAh or more is recommended.

Using the NiMH battery other than that described above will result in degradation of its performance and service life.

The performance of the functions may not be fully exercised depending on the external battery.

For recommended external battery, contact us.

Do not subject the external battery to strong impact.

⚠**DANGER:**

Do not use the battery charger outdoors.
Otherwise, the electric shock, smoke or fire may occur, which may cause the damage to the battery charger. The battery charger is designed for indoor use.

Do not throw the external battery into fire or subject it to heat.

Do not open or modify the external battery.

⚠**WARNING:**

Do not cover the battery charger with clothing, bedding or other materials while charging.

When the charging is complete, always unplug the power plug of the battery charger from the power outlet.

Do not allow the external battery compartment to become deformed and never put any foreign object into it.

Do not allow metal or water, or any other fluid to get into the external battery compartment and onto the external battery terminals.
If any foreign object enters the external battery case, remove the external battery and disconnect the AC adapter, and immediately contact us.

Do not remove the external battery immediately if the instrument was used continuously for a long time.
The heat generated by the external battery causes the risk of burn injury.

Do not touch the external battery terminals with your wet hands.

Be careful not to allow the ventilation port *(A)* of the external battery case to be blocked with dirt or dust.

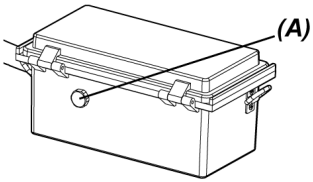

If you plan not to use the instrument for a long time, remove the external battery from the external battery case, and store it in a dry place.
If you do not use the external battery, remove the external battery case from the drum unit, remove the external battery from the case, and store it.

Otherwise, the external battery fluid may leak and the heat generation may result in a fire or injury.

Keep the external battery out of the reach of small children.

If liquid leaking from the external battery comes into contact with your body, rinse it off immediately with clean water from the tap, etc. and seek medical attention if necessary.

⚠WARNING:

Do not insert the external battery in the external battery case with wrong polarity (+ or -).

Do not insert or take out the external battery while connecting the external battery case to the drum unit.

Do not use the external battery if any abnormality such as liquid leakage, etc. is found.

Do not use the external battery of a different type for the external battery case.

Do not use old batteries together with new batteries, or batteries together with those with different charging states.

Do not use the battery other than the external battery such as alkaline battery, manganese battery, etc. for the external battery case.

⚠CAUTION:

If you are experiencing problems in inserting the external battery, do not attempt to insert it forcibly.
Check the orientation of the external battery and check the terminals for abnormalities. Attempting to insert the external battery forcibly into the compartment may cause malfunction.

If you are experiencing problems removing the external battery from the external battery case, do not attempt to remove it forcibly.
Contact us.

When replacing the external battery, do not repeat inserting or removing it rapidly.
Otherwise, the power may not be turned ON.

Do not store the external battery in the following locations.

- Environments exposed to water, high temperature, high humidity, low humidity and dust
- Locations exposed to direct sunlight or radiation
- Locations exposed to gas containing halide*1

*1 The performance of some electrical parts may deteriorate due to the halide in insecticides, pesticides and gaseous extinguishing agents, etc.

Do not use, charge or store the external battery in areas exposed to direct sunlight, in a closed automobile in the sun, or near a heater, etc.

Do not use the external battery if it shows any irregularity such as fluid leakage, discoloration, deformation, abnormal odor or other abnormality.

Do not immerse the external battery in fresh water or sea water, or allow the external battery to get wet.

⚠CAUTION:

Note the following when replacing the fuse of the external battery case.

- Do not touch the fuse with your wet hands.
- Remove the external battery case from the drum unit carefully.
- Remove the external battery from the external battery case carefully.
- Use the specified fuse.

Otherwise, the electric shock may be caused.

When disposing of an external battery, be sure to do so in accordance with all local laws, rules, and regulations.

NOTE:

- The contamination of external battery terminals with sweat or oil will cause the contact failure. If the external battery is dirty, wipe it with a dry cloth before use.
- Use the external battery correctly. If the external battery is used incorrectly, external battery fluid leakage, heat generation or damage may result. Insert the external battery in the correct orientation when replacing it.
- When recharging the external battery, recharge it fully. Otherwise, the performance of the external battery may not be fully exercised.
- Before transporting the instrument, be sure to store the external battery in the external battery case.
- It is recommended to contact the airlines in advance if you plan to transport the external battery.
- When transporting the instrument, DO NOT store external batteries in the external battery case. Otherwise, the external battery case may be damaged.
- The remaining external battery level may be different from that of the battery indicator displayed on the LCD monitor depending on the makers or operating temperature environments.

Safety precautions - Illumination light precautions -

This product is equipped with high intensity illumination in order to obtain sufficient brightness for observing the inspection object. When the illumination of this product is turned ON, the intense light comes out from the distal end of the insertion tube of the scope unit. Comply strictly with the precautions described below when using this product.

⚠CAUTION:

Turn OFF the illumination if not necessary.
If the illumination light enters your eyes, your eyes may get injured. If you see the illumination light for a long time even though it is at the edge of your field of view, your eyes may get injured.

If there is any possibility that the illumination light enters human eyes, turn OFF the illumination if not necessary.

In particular, be careful the illumination turns ON automatically in the following cases.

- When you turn ON the power while the optical adapter is attached.
- When you attach the optical adapter while the power is turned ON.

Do not stare at the illumination light.
Otherwise, your eyes may get injured. If you stare at the illumination light for a long time even though seeing it diagonally or from the side, your eyes may get injured.

Do not stare at the light reflected from the illumination light.
The light reflected from the illumination light may be collected depending on the shape of the reflection surface. If such reflected light enters your eyes, your eyes may get injured.

If there are people around you, call attention according to the precautions described in this chapter.
People around you may get eye injury.

Do not leave the distal end of the insertion tube keeping its illumination turned ON near flammable substances for a long time.
Otherwise, fire may result.

Information of IEC62471

- RISK GROUP2
  - **⚠CAUTION** : Possibly hazardous optical radiation emitted from this product. Do not stare at operating lamp. May be harmful to the eyes.

Rating plate / Caution plate

The safety ratings, cautions, and serial numbers are described on the labels attached to this product. Study the meaning of the safety symbols and always use the product in the safest possible manner. If labels are missing or if their contents are illegible, contact us.

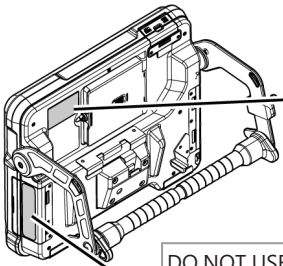

Conformity label, rating, model, serial number

EVIDENT CORPORATION
INDUSTRIAL ENDOSCOPE
SERIAL# : Y000000
99.99
IV9000GA-B MADE IN JAPAN

DO NOT USE

DO NOT USE

⚠CAUTION:

Do not peel off the sticker showing "DO NOT USE".

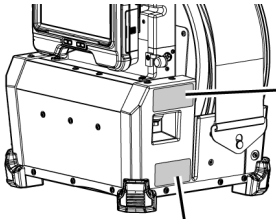

Conformity label, model, serial number, precautions

INDUSTRIAL ENDOSCOPE
MODEL : IV9000GA
SERIAL# : Y000000
99.99
R-R-OLY-182209014
This device complies with part 15 of the FCC Rules. Operation is subject to the following two conditions : (1) This device may not cause harmful interference, and (2) this device must accept any interference received, including interference that may cause undesired operation.
INPUT
AC Adapter 16 V ⎓ 51W
Li-ion Battery 1 V ⎓ 50W
Ni-MH Battery 9 V ⎓ 40W
EVIDENT CORPORATION
Nagano 399-0495, JAPAN
MADE IN JAPAN
IV9000GA-D

⚠CAUTION:

- Be careful for the possibly hazardous optical radiation emitted from this product. (See page 16)
- Pay careful attention to the temperature of the distal end of the insertion tube immediately after using this instrument in warm temperature environments. (See page 3)

Information of compressor

EVIDENT CORPORATION
DESIGN CODE : AS1210-3
DESIGN PRESSURE : 0.7MPa
P.O.NO. : Not applicable
DATE OF MANUFACTURE : YYYY.MM
SEE MANUAL

Conformity label, model, serial number, precautions

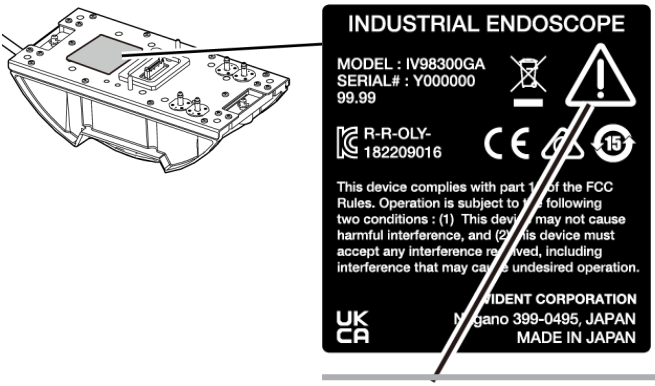

⚠CAUTION:

- Be careful for the possibly hazardous optical radiation emitted from this product. (See page 16)
- Pay careful attention to the temperature of the distal end of the insertion tube immediately after using this instrument in warm temperature environments. (See page 3)

Conformity label, model, serial number, precautions

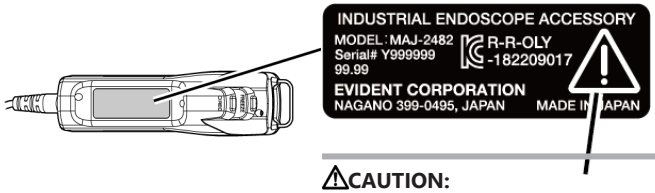

⚠CAUTION:

Remove electricity before using the remote control unit.

(See page 6)

Conformity label, model, precautions

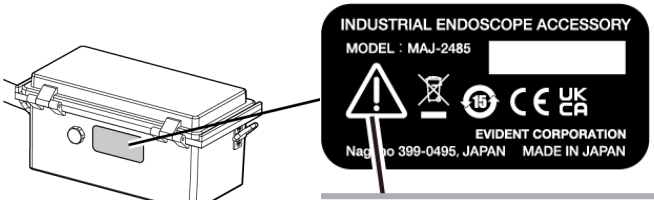

⚠CAUTION:

When using the external battery, follow cautions described in instruction manual.

(See page 13)

Information of fuse

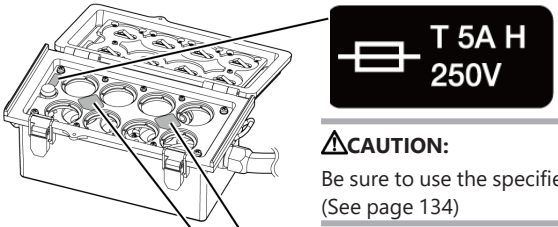

⚠CAUTION:

Be sure to use the specified fuse. Otherwise, a fire may be caused. (See page 134)

Information of insertion direction of external battery

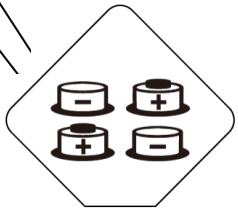

⚠CAUTION:

Do not insert the external battery in the external battery case with wrong polarity (+ or -). (See page 50)

1. Unpacking

1.1 Unpacking

When unpacking, make sure that all items listed below are included.

If anything is missing or damaged, contact us.

Name	Quantity
Base unit	1
Drum unit	1
SDHC card (4 GB, inserted into the SDHC card slot of the base unit)	1
Optical adapter case	1
Lens cleaning kit (cotton swab, brush)	1
AC adapter	1
Relay cable (1.5 m)	1
HDMI cable	1
Guide head (for 120D)	1
Guide head (for 220D)	1
Lock belt	1
Instruction manual	1
Carrying case	1

*For procedures to store this instrument in the carrying case, see "Storing in the carrying case" (page 135).

1.1.1 Storing in the optical adapter case

The following items can be stored in the adapter case provided with the drum unit.

- Optical adapter
- SDHC card
- O-ring (kept in a bag)
- Tip cap

Store these items in the optical adapter case when they are not in use.

The figure on the right shows the locations to store each item.

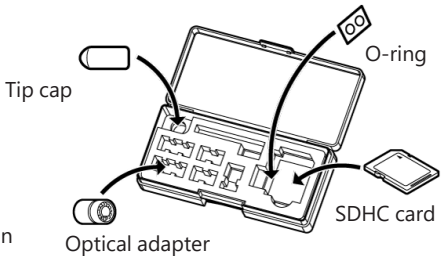

Storing the optical adapter case

The optical adapter case can be stored in the optical adapter case holder on the drum unit.

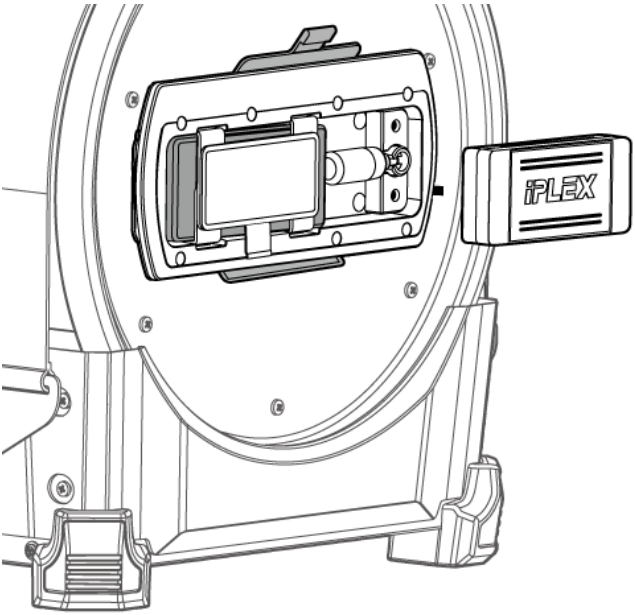

1.1.2 Options

- Scope unit

  IV9●●●GA ((●●●) indicates the scope diameter and the length.)

Name	Quantity
Scope unit	1
Tip cap	1
Spool	1
Lens cleaning kit (cotton swab, brush)	1
O-ring	12
Model number identification sticker (IV98200GA)	1
Model number identification sticker (IV98300GA)	1
Instruction manual	1
Scope case	1

- Optical adapter

Name	Quantity
Optical adapter	1
O-ring	6
Instruction manual	1

See "System chart" (page 150) for information on other options.

2. Nomenclature

2.1 Nomenclature

Base unit

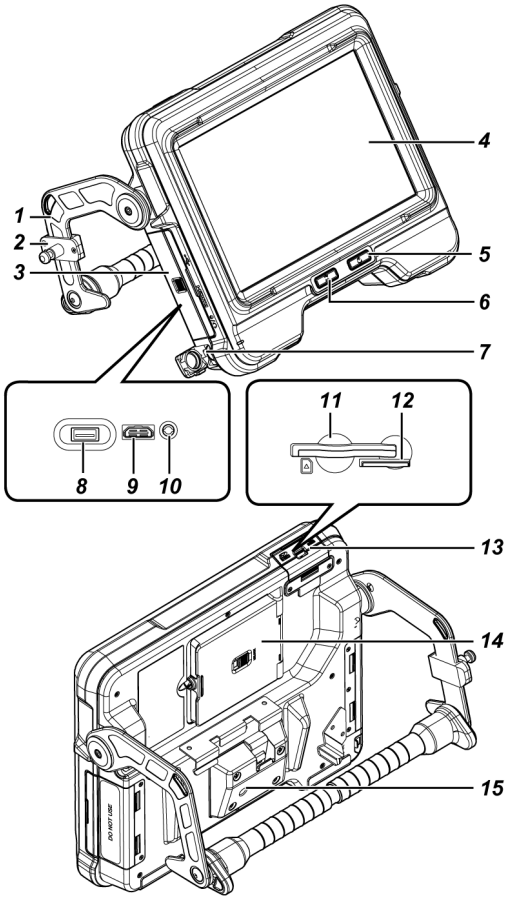

No.	Name
1	Handle
2	Hook for attaching the remote control unit
3	Interface door
4	LCD monitor
5	[POWER] button (⏻)
6	[LIGHT] button (☼)
7	DC-IN terminal
8	USB connector
9	HDMI terminal
10	Headset terminal
11	SDHC card slot
12	microSDHC card slot
13	SD card door
14	Relay cable door
15	Tripod mounting hole

Drum unit

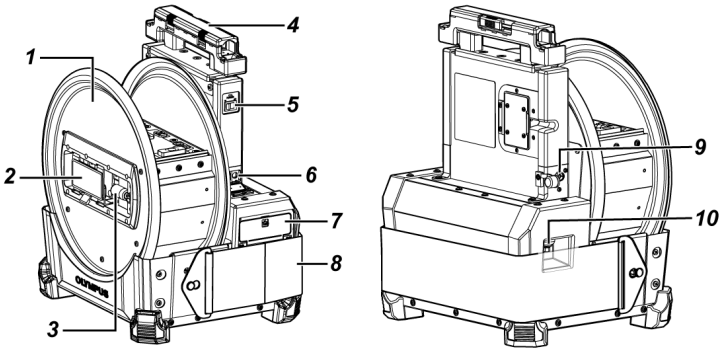

No.	Name
1	Drum rotator
2	Optical adapter holder
3	Drum rotation handle
4	Handle
5	Main switch
6	DC-IN terminal
7	Battery door
8	Lock belt
9	Ext-Batt.-IN terminal
10	Drain

Scope unit

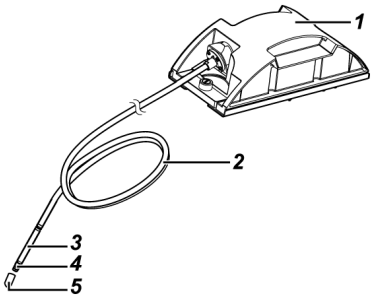

No.	Name
1	Scope unit main body
2	Insertion tube
3	Angulation section
4	Distal end
5	Tip cap

Relay cable or 5 m relay cable

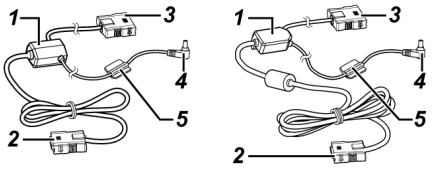

No.	Name
1	Branch
2	Connector (for drum unit)
3	Connector (for base unit)
4	Connector for power supply
5	Fixture

Remote control unit

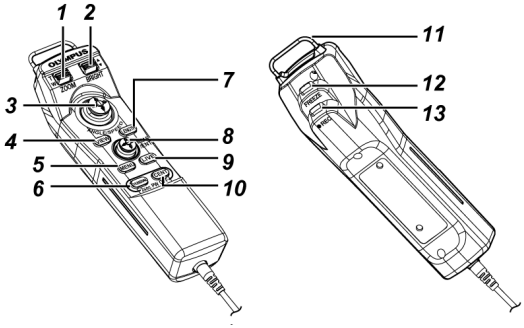

No.	Name
1	[ZOOM] lever
2	[BRIGHT] lever
3	[ANGLE/SPEED] joystick
4	[VIEW] button
5	[MENU] button
6	[THUMBNAIL] button
7	[LENGTH] button

No.	Name
8	[MEAS/ENTER] joystick
9	[LIVE] button
10	[CENT] button
11	Hanger for attaching the base unit
12	[FREEZE] button
13	[RECORD] button

External battery case

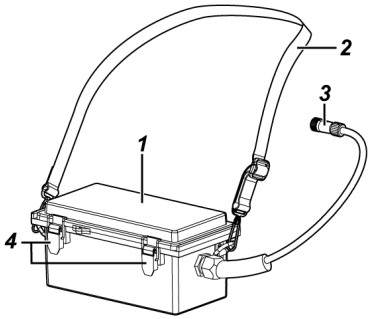

No.	Name
1	External battery case main body
2	Strap
3	Connector
4	Latch

2.2 Distal end / Optical adapter nomenclature

Distal end

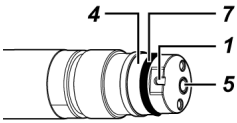

Optical adapter

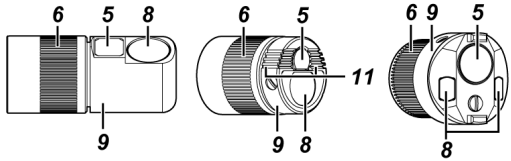

Side-view Forward view 220D

No.	Name
1	Optical adapter positioning groove
2	First screw thread
3	Second screw thread
4	Connecting screw thread
5	Objective lens
6	Nut
7	O-ring
8	Illumination
9	Product name abbreviation*1
10	Positioning pin
11	Oil drain groove*2

Optical adapter internal view

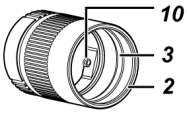

*1 For information about the product name abbreviation, see "Optical adapter specifications" (page 147).

*2 The oil attached to the objective is drained from the oil drain groove provided near the objective, which keeps the image clear. (Optical adapter 120D only)

2.3 LCD monitor nomenclature

Live screen

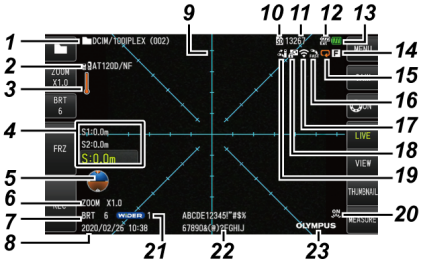

Freeze screen

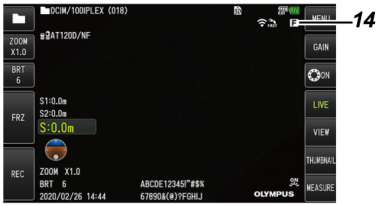

No.	Icon/ Indicator	Name
1	-	Folder name
2	-	Optical adapter name
3		Distal end temperature indicator
4	-	Insertion length information
5		Gravity direction icon
6	-	Zoom level
7	-	Brightness level
8	-	Date/Time
9	-	Grid
10		SD card icon
11	-	Number of images that can be recorded*1
12		External battery indicator
13		Battery indicator
14		Freeze icon
15		Constant video recording icon
		Recording movie icon
		Recording sound icon
16		Angulation speed icon

No.	Icon/ Indicator	Name
17		Wireless LAN icon
18		Image rotation stop icon
19		Angle centering icon
20	ON / ECO	LED icon
21	WiDER Manual	Gain mode icon
22	-	Title
23	-	Logo

*1 This is displayed for three seconds when the SDHC card is inserted or when the number of recordable images changes.

TIP:

- The title input on the live screen last time the systems was used is displayed.
- If you notice any dirt, stains, or other abnormalities on the LCD monitor, see "Storage and maintenance" (page 130).

Live screen (touch panel buttons)

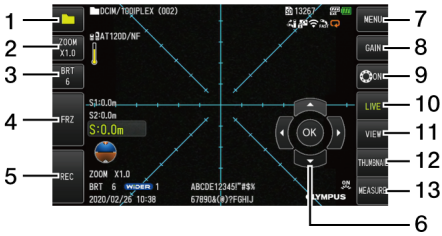

●When [ANGLE] button is ON

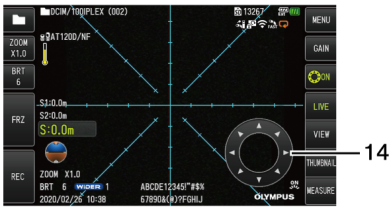

●When recording the movie

No.	Button name	Function
1	FOLDER	Shows or hides the [MEAS/ENTER] button (No.***6***)
2	[ZOOM]	Shows or hides the zoom level buttons (T, W)
3	[BRT]	Shows or hides the brightness level buttons (+, -)
4	[FRZ]/[STOP]	Switches between the live image and frozen image Stops recording when recording the movie
5	[REC]/[CAPTURE]	[REC] Records the still image (short-press) and the movie (long-press) on the live screen Records still image (short-press) on the freeze screen [CAPTURE] Records the still image when recording the movie
6	[MEAS/ENTER]	Switches between folders
7	[MENU]	Displays the different menus
8	[GAIN]	Switches the gain mode
9	[ANGLE/INDEX]	Shows or hides the angulation operation button (No.***14***) Tapping the button each time repeats switching the angulation operation button to Show, Move or Hide. Adds index mark when recording the movie
10	[LIVE]	Moves to the live screen when in the freeze screen mode
11	[VIEW]	Moves to the view screen
12	[THUMBNAIL]	Moves to the thumbnail screen
13	[MEASURE]	Moves to the scaler measurement screen
14	Angulation operation	Perform the angulation operation
15	[STOP]	Ends movie recording
16	[CAPTURE]	Records the still image during movie recording
17	-	Switches between the remaining movie recording time and elapsed time
18	[INDEX]	Adds the index mark during movie recording

Thumbnail screen

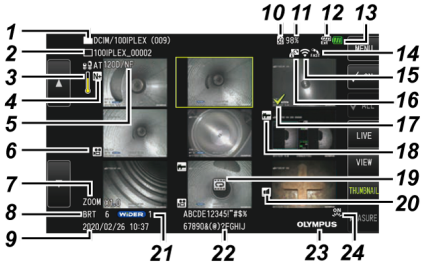

No.	Icon/ Indicator	Name
1	-	Folder name
2	-	File name
3		Distal end temperature indicator
4		Note icon
5	-	Optical adapter name
6		Movie icon
7	-	Zoom level
8	-	Brightness level
9	-	Date/Time
10		SD card icon
11	-	Remaining space on SD card
12		External battery indicator
13		Battery indicator
14		Angulation speed icon
15		Wireless LAN icon
16		Image rotation stop icon
17		Check-mark icon
18		Measurement icon
19		Constant video icon
20		Sound icon

No.	Icon/ Indicator	Name
21	WiDER Manual	Gain mode icon
22	-	Title
23	-	Logo
24	ON ECO	LED icon

Thumbnail screen (touch panel buttons)

No.	Button name	Function
1	Previous page	Jumps to the previous page
2	Next page	Jumps to the next page
3	Check-mark [ON]	Switches the check-mark assignment mode of the thumbnail images
4	Check-mark [ALL]	Selects or deselects all the check-marks of the thumbnail images

View screen

●When playing back the still image

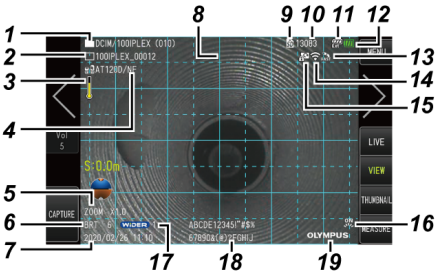

No.	Icon/ Indicator	Name
1	-	Folder name
2	-	File name
3		Distal end temperature indicator
4	-	Optical adapter name
5	-	Zoom level
6	-	Brightness level
7	-	Date/Time
8	-	Grid
9		SD card icon
10	-	Number of recordable images
11		External battery indicator
12		Battery indicator
13		Angulation speed icon
14		Wireless LAN icon
15		Image rotation stop icon
16		LED icon
17		Gain mode icon
18	-	Title
19	-	Logo

●When playing back the still image and adjusting the volume

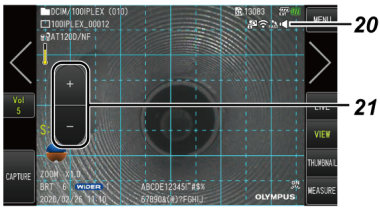

No.	Icon/ Indicator	Name
20		Playing back sound icon
21	-	Volume level button

●When playing back the movie

No.	Icon/ Indicator	Name
22	-	Movie playback time
23	-	Movie playback position bar
24	-	Index mark
25	-	Total movie duration
26	▶	Play movie icon
	❚❚	Pause movie icon
	■	End movie playback icon

View screen (touch panel buttons)

●When playing back the still image

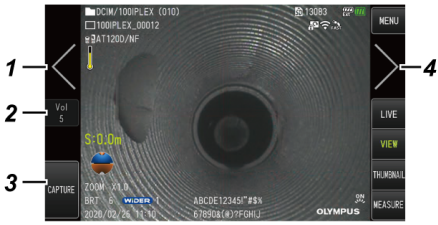

No.	Button name	Function
1	Display Previous Image *1	Jumps to the previous image
2	[Vol]	Shows or hides the volume level buttons (+, -)
3	[CAPTURE]	Records still image when playing back the still image as well as when movie playback is paused Ends recording the sound after recording the still image
4	Display Next Image *1	Jumps to the next image

●When playing back the movie

No.	Button name	Function
5	Backward	Jumps to previous index mark when playing back the movie
6	Fast Reverse	Fast reverse when playing back the movie
7	Fast Forward	Fast forward when playing back the movie
8	Forward	Jumps to next index mark when playing back the movie
9	▷	Play movie *2
	▯▯	Pause movie *2

*1 You can also display the previous and next image by swiping on the screen (sliding your finger on the screen).

*2 You can also pause or playback the movie by tapping the screen.

Constant video playback screen

●Playing back using only the touch panel

●Playing back using the touch panel and [MEAS/ENTER] joystick*

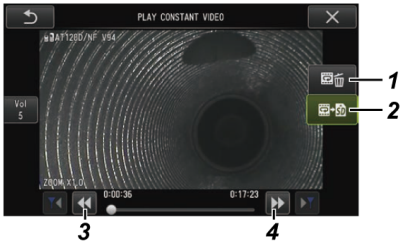

No.	Button name	Function
1	ERASE	Erases a constant video
2	COPY	Copies a constant video on an SDHC card
3	Fast Reverse	Fast reverse when playing back the movie
4	Fast Forward	Fast forward when playing back the movie

*For procedures to play back the movie using the joystick, see "Playing back and pausing the movie" (page 93).

TIP:

- The [MENU] button can be used to switch the constant video playback screen between a screen that is operated using only the touch panel and one that is operated with the touch panel and [MEAS/ENTER] joystick.
- On the screen for playing back the movie with the touch panel and [MEAS/ENTER] joystick, the erase button and the copy button displayed on the right side are displayed in large size.

Note Display Screen

●Operating using only the touch panel

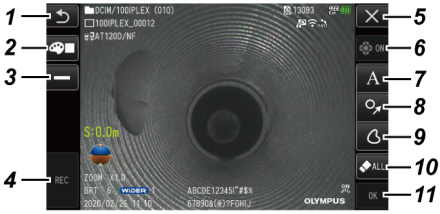

●Operating using the touch panel and [MEAS/ENTER] joystick

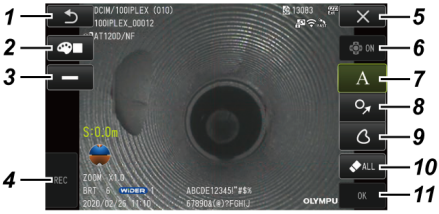

No.	Button name	Function
1	RETURN	Returns to the menu of the view screen
2	COLOR	Selects the line color
3	LINE	Selects the line width
4	REC	Records the image with note information
5	CLOSE	Closes the note display screen and returns to the previous screen
6	[CURSOR/OK ON]	Shows, moves or hides the [CURSOR/OK] button
7	TEXT	Adjusts the layout of the text and displays it on the image
8	MARK	Adjusts the layout of the selected mark and displays it on the screen
9	FREE DRAWING	Adjusts the layout of the figure drawn by dragging (tracing on the screen with finger) and displays it on the screen. Free drawing is available only with the touch panel.
10	ERASE/ ERASE ALL	Erases note information made before deciding the layout. Erases all note information after deciding the layout
11	OK	Decides the shape of the free drawing. Decides the layout of note information.

TIP:

- The [MENU] button on the remote control unit can be used to switch the note display screen between a screen that is operated using only the touch panel and one that is operated with the touch panel and [MEAS/ENTER] joystick.
- On the screen that is operated with the touch panel and [MEAS/ENTER] joystick, the buttons on both sides are displayed in large size.
- You can move the note information on the image until the [OK] button is pressed.

3. Pre-operation preparation and inspection

Be sure to perform the preparation and inspection described in this chapter before using the instrument. At the first sign of any abnormality, immediately stop using the instrument and perform the required actions as described in "Troubleshooting" (page 123).

Inspections are not only required before use but also should be conducted periodically.

NOTE:

Make sure that the power of the instrument is turned OFF before performing the pre-operation preparation and inspection.

3.1 Transporting the case

Using the handle

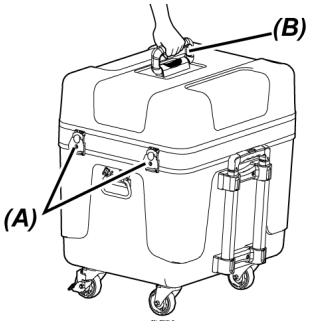

1. Make sure that the latch *(A)* of the case is completely closed before lifting the case by holding the handle *(B)*.

Using the extendable handle

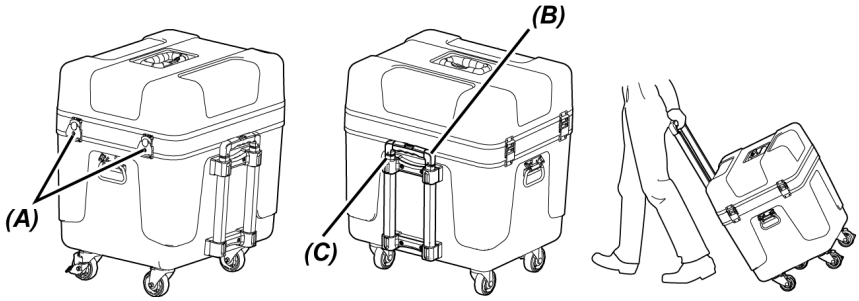

1. **Make sure that the latch *(A)* of the case is completely closed.**

2. **Press the PUSH button *(B)* to unlock the extendable handle *(C)*, and then extend it.**

3. **To store the extendable handle, press the PUSH button to push down the extendable handle.**

4. **Hold the extendable handle *(C)*, tilt the case, and move it by rolling the wheels on the bottom of the case.**

3.2 Preparing the product

3.2.1 Removing the units from the carrying case

1. **Remove the following units stored in the top cover.**
   - Optical adapter case ***(A)***
   - Remote control unit ***(B)***
   - Guide head ***(C)***
   - Push rod adapter ***(D)***
   - Pole unit (pole, camera platform) ***(E)***
   - Battery ***(F)***

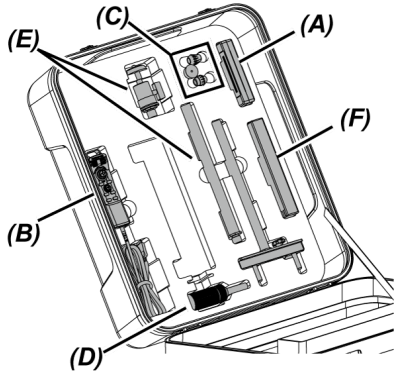

2. Remove the following units.

- Instruction manual ***(G)***
- External battery case ***(H)***
- 5 m relay cable, battery charger, AC adapter, AC power cord and HDMI cable***(I)***

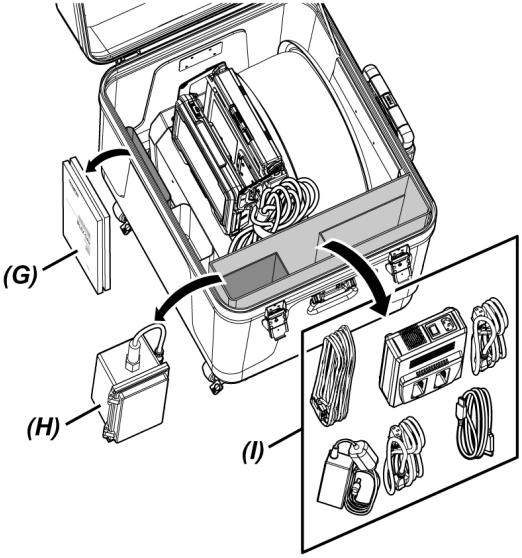

3. **Hold the handle of the drum unit, and remove the drum unit and the base unit from the carrying case.**

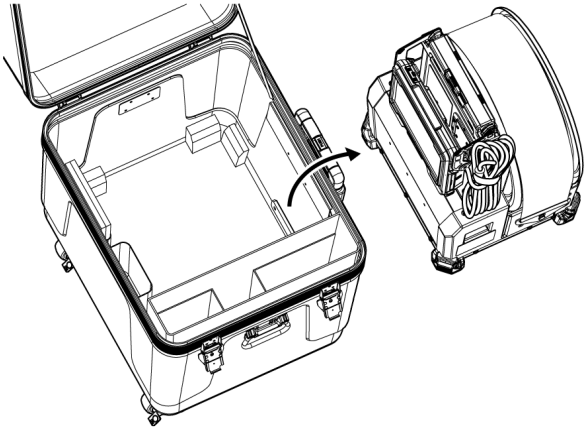

3.2.2 Removing the scope unit from the scope case

1. **Hold the scope unit main body *(A)* and the spool *(B)*, and remove them from the case.**

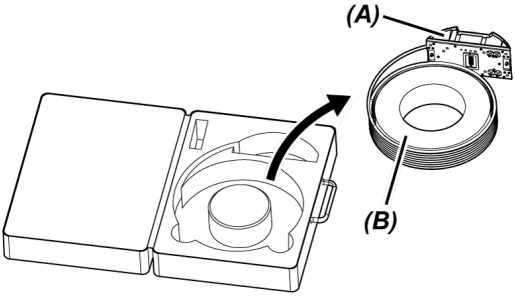

3.2.3 Attaching the scope unit

NOTE:

Turn OFF the power of the drum unit before connecting or disconnecting the scope unit.

1. **Make sure that no foreign objects such as dirt or dust, etc. are attached to the terminals of the drum unit and the scope unit.**

NOTE:

Check that there is no scratch or damage on the O-rings (4 positions) ***(A)*** of the terminal on the scope unit side. If any abnormality occurs on the O-ring, replace it with the O-ring (with grease) provided with the scope unit. Otherwise, the angulation performance may be degraded.

2. **Attach the scope unit to the drum unit.**

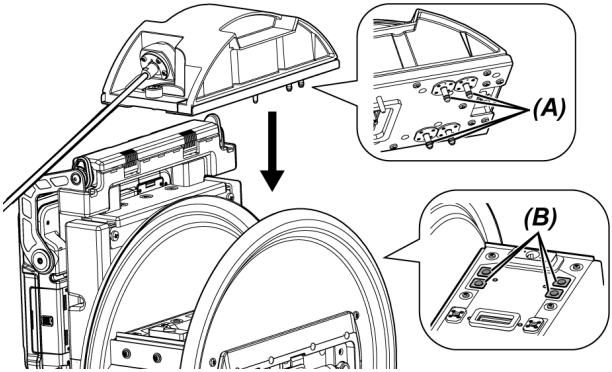

NOTE:

Check the orientation to attach the scope unit according to the air supply connector positions (4 positions) ***(B)***.

3. **Tighten the clamping screws (2 positions) of the scope unit using the coin, etc., and secure it to the drum unit.**

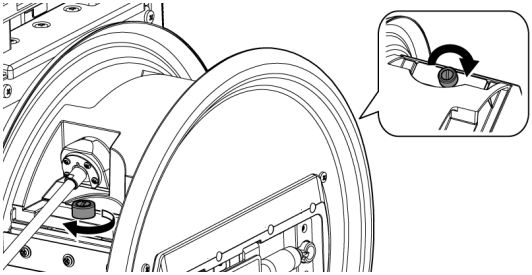

NOTE:

Make sure that the clamping screws (2 positions) of the scope unit are tightened completely.

4. **Rotate the drum rotation handle *(C)* of the drum unit and wind the insertion tube *(D)* of the scope unit around the drum rotator.**

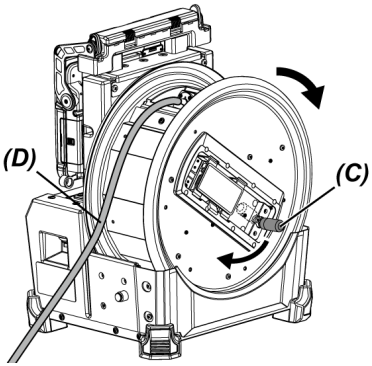

⚠CAUTION:

- Do not rotate the drum rotator by holding the parts other than the drum rotation handle to prevent from getting injured.
- Wrap the insertion tube around the drum evenly.

3.2.4 Attaching and removing the relay cable

This section describes the procedures to attach the relay cable (1.5 m) provided with the drum unit and the 5 m relay cable (optional).

NOTE:

Be sure to turn OFF the power before connecting or disconnecting the relay cable.

Attaching the relay cable

1. **Slide the fixing lever of the handle at the upper area of the drum unit horizontally, open the handle cover, and remove the base unit from the drum unit.**

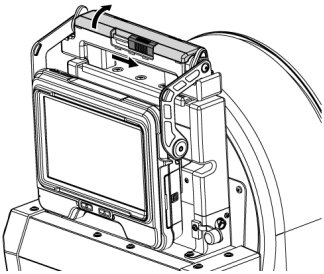

2. **Put the relay cable through the cable holder *(A)* of the base unit.**

3. **Attach the relay cable to the base unit by aligning the fastening tape of the fixture *(B)* of the relay cable with the fastening tape of the base unit, and secure the relay cable to the base unit.**

4. **Open the DC-IN terminal cap *(C)* of the base unit, and connect the connector *(D)* for power supply of the relay cable to the DC-IN terminal.**

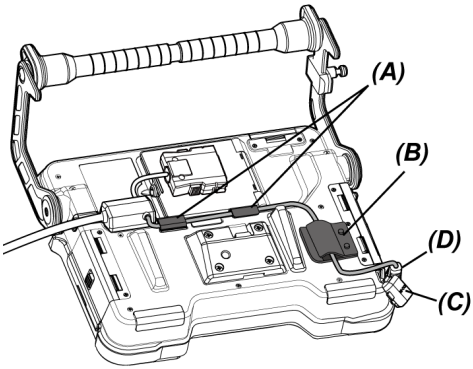

5. **Open the relay cable door *(E)* of the base unit, and connect the relay cable *(F)*.**

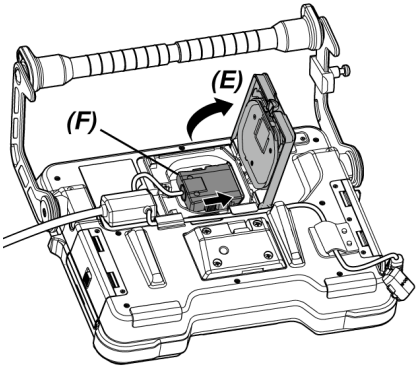

6. **Route the cable so that it is not subject to excess force or twist, and close the relay cable door *(E)* while paying attention not to allow the cable to be caught.**

When using the 5 m relay cable, push the cable in the dent and close the relay cable door ***(E)***.

NOTE:

Close the relay cable door securely.

7. **Push the relay cable in the cable fixing part *(G)* of the base unit.**

When using the 5 m relay cable, push the protrusion of the branch in the dent ***(G)*** of the base unit.

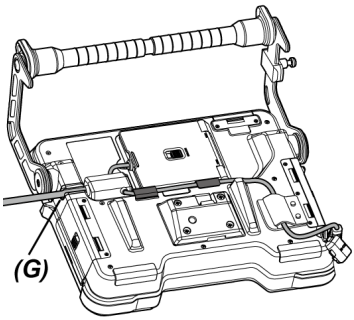

Relay cable

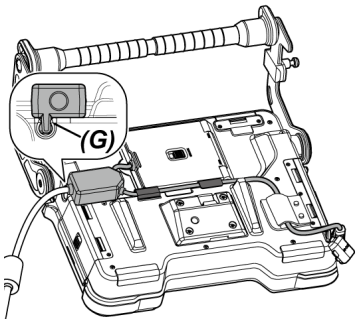

5 m relay cable

8. **Open the relay cable door *(H)* of the drum unit, and connect the relay cable.**

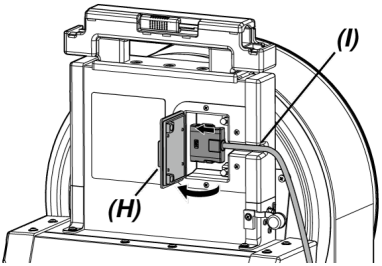

9. **Push the cable in the cable fixing part *(I)* of the drum unit, and close the relay cable door *(H)*.**

NOTE:

Close the relay cable door securely.

Removing the relay cable

Remove the relay cable in the reverse order of the attaching procedures.

NOTE:

Holding the fixture ***(B)*** as shown in the picture below, remove the relay cable from the base unit. Otherwise, the relay cable may be damaged.

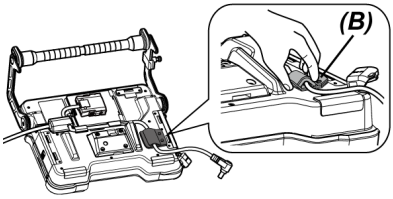

3.2.5 Attaching and removing the base unit

Attaching the base unit

1. **Slide the fixing lever of the handle at the upper area of the drum unit horizontally, and open the handle cover.**

2. **When attaching the base unit to the drum unit, attach the base unit to the handle of the drum unit.**

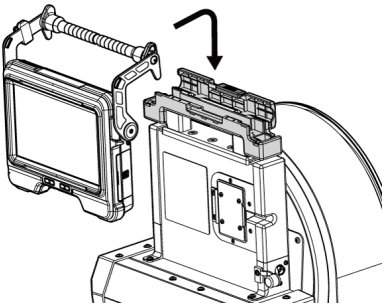

TIP:

- The example of attaching the base unit is illustrated below.

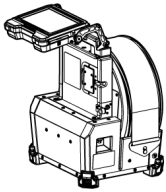

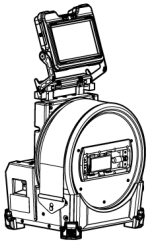

The screen of the LCD monitor must be rotated 180 degrees.

(See "<ROTATE>" (page 111))

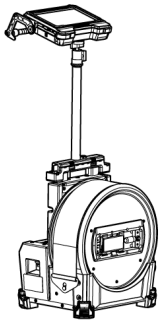

For procedures to use the pole unit, see "Attaching and removing the pole unit" (page 61).

- For procedures to use the base unit without attaching to the drum unit, see "Using the base unit without attaching to the drum unit" (page 48).

3. **Close the handle cover of the drum unit and slide the fixing lever to the original position.**

Removing the base unit

Remove the base unit in the reverse order of the attaching procedures.

Using the base unit without attaching to the drum unit

The base unit can be placed on a flat surface, hung from a height, or attached to a tripod for operation and observation.

Placing the base unit on a flat surface

When performing the observation by placing the base unit on a flat surface, use the handle as a stand.

Adjust the handle so that the LCD monitor screen is at an easy-to-view angle. The angle of the handle can be adjusted within the arrow range as shown below.

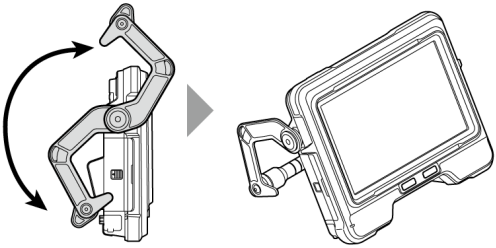

Hanging the base unit

When performing the observation by hanging the base unit, adjust the angle of the handle and hook the handle to hang the base unit.

The base unit can be hung onto a pipe of diameter less than ø40 mm.

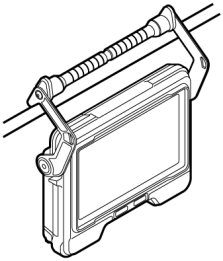

Attaching the base unit to the pole unit

For procedures to attach the base unit to the pole unit, see "Attaching and removing the pole unit" (page 61).

Attaching the base unit to a tripod

When making observations using a tripod, attach the tripod to the tripod mounting hole on the base unit.

⚠CAUTION:

Be sure to attach the base unit to the tripod securely to prevent it from falling off, which may cause injury or damage to the unit as a result.

3.3 Preparing the power supply

3.3.1 Using the battery

Checking the remaining battery level (on battery alone)

The remaining battery level can be checked on the [POWER INDICATOR] of the battery. (Note that it may be different from the battery indicator on the LCD monitor.)

For details, refer to the instruction manual of the battery.

Loading the battery to the drum unit

Follow the procedures below to load the battery.

1. Slide the release knob of the battery door of the drum unit to open the door.

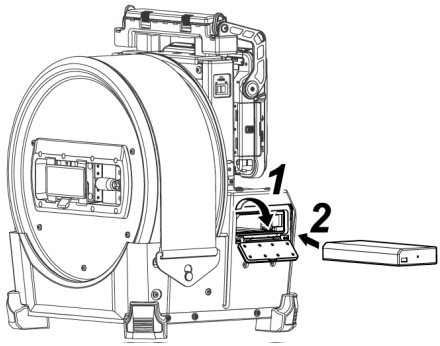

2. Insert the battery paying attention to the orientation of the battery.

3. Make sure that the battery is locked, and close the door.

Make sure that the battery door is locked.

TIP:

- Be sure to recharge the battery before using it for the first time after purchase or after it has not been used for a long period.
- In general, the battery performance is degraded temporarily as the ambient temperature drops. Note that the battery performance degraded due to the low temperature recovers when the temperature rises to a normal level.
- A full charge will provide approximately 180 minutes (in general) of continuous operation. The actual operating time depends on the charging method, operating environments or setting conditions of this instrument. It is recommended to prepare multiple spare batteries if long hours of battery-powered operations are expected. It takes approximately 2 hours and 30 minutes (in general) to charge the battery.
- The battery cannot be charged with this instrument. For procedures to charge the battery, refer to the instruction manual provided with the battery charger.
- The battery is a consumable item.

Removing the battery

Remove the battery by moving the tab ***(A)*** at the battery insertion slot in the arrow direction.

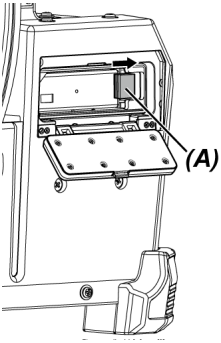

3.3.2 Using the external battery

Follow the procedures below to connect the external battery

1. **Insert the eight external batteries straight in the external battery case paying attention to the orientation of the external batteries, and close the latch *(A)* of the case.**

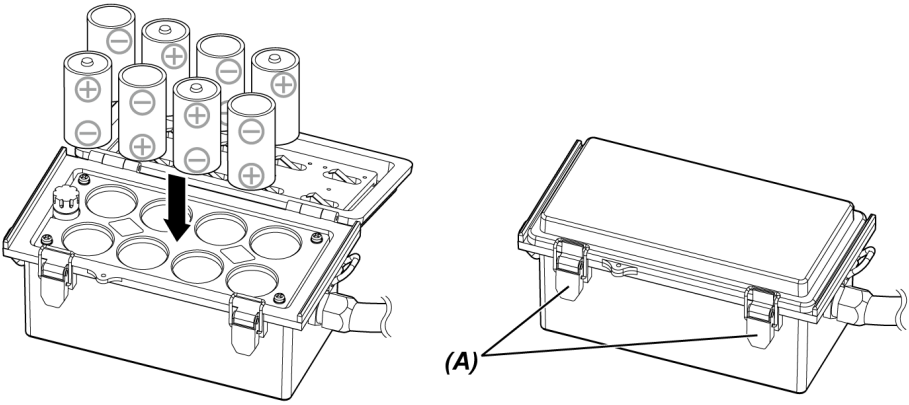

NOTE:

- Do not insert the external battery in the external battery case with wrong polarity (+ or -).
- If you insert the external battery diagonally, it is caught in the middle as shown in the picture below and it cannot be inserted completely.
  In this case, pull up the external battery once and insert it straight again.

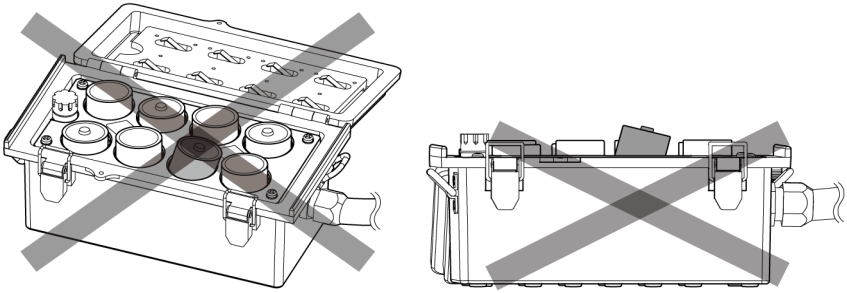

2. **Hang the strap of the case over the handle of the drum unit.**

3. **Attach the case connector to the Ext-Batt.-IN terminal on the drum unit.**

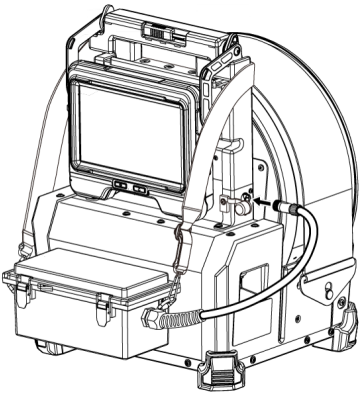

TIP:

- Be sure to recharge the external battery before using it for the first time after purchase or after it has not been used for a long period.
- In general, the external battery performance is degraded temporarily as the ambient temperature drops. Note that the external battery performance degraded due to the low temperature recovers when the temperature rises to a normal level.
- It is recommended to prepare multiple spare external batteries if long hours of battery-powered operations are expected.
- The external battery cannot be charged with this instrument. For procedures to charge the external battery, refer to the instruction manual provided with the external battery charger.
- The external battery is a consumable item.

Removing the external battery

1. **Disconnect the cable of the external battery case from the Ext-Batt.-IN terminal on the drum unit.**

2. **Open the latch of the case and remove the external batteries (8 units) from the case.**

3.3.3 Using the AC adapter

Follow the procedures below to connect the AC adapter.

1. Open the DC-IN terminal cap *(A)* on the drum unit.

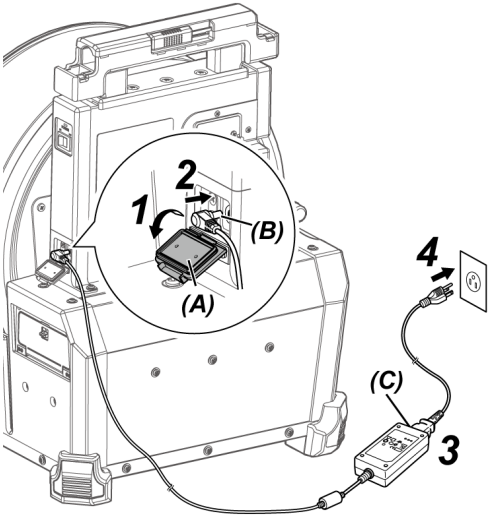

2. Connect the connector *(B)* for power supply of the AC adapter to the DC-IN terminal of the drum unit.

3. Connect the AC power cord to the AC inlet *(C)* of the AC adapter.

4. Connect the plug of the AC power cord securely to a power outlet.

3.4 Attaching and removing the optical adapter

NOTE:

- **Be sure to attach the O-ring to the distal end of the insertion tube before using the optical adapter.**

  Water or dirt that enters the unit from the connecting area between the insertion tube and the optical adapter may cause malfunction or damage to the unit. Also note that the optical adapter by itself is not watertight.
- **Never use the instrument while dirt or water is attached inside the optical adapter.**

  Otherwise, the water tightness between the optical adapter and the distal end may be lost, or the optical adapter or the distal end may be damaged.
- **When replacing the adapter, do not hold the insertion tube at the part that is beyond the angulation section and closer to the distal end.**

  Otherwise, the angulation section may be damaged.

Nomenclature of optical adapter and distal end

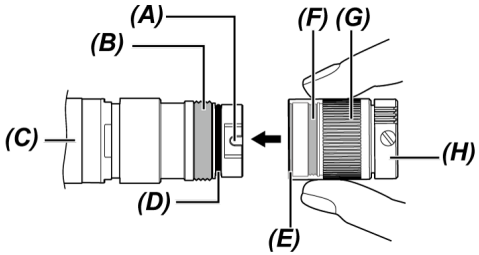

	Name
(A)	Optical adapter positioning groove
(B)	Connecting screw thread
(C)	Distal end
(D)	O-ring
(E)	First screw thread
(F)	Second screw thread
(G)	Nut
(H)	Optical adapter

Attaching the optical adapter

1. Holding the optical adapter and the distal end so that they make one straight line with each other, carefully insert the optical adapter into the distal end.

2. Rotate the nut *(G)* of the optical adapter *(H)* clockwise until the connecting screw thread passes the first screw thread.

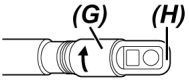

3. After the connecting screw thread passes the first screw thread, rotate the optical adapter main body *(I)* clockwise while pushing gently until the optical adapter main body fits into the positioning groove of the insertion tube and stops rotating anymore.

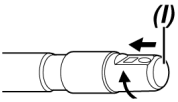

4. Rotate the nut of the optical adapter clockwise to attach the connecting screw thread to the second screw thread. Tighten the nut until it stops completely.

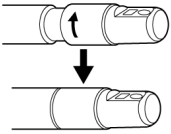

Removing the optical adapter

Remove the optical adapter in the reverse order of the attaching procedures.

3.5 Inserting and removing the SDHC card or the microSDHC card

Inserting the SDHC card or the microSDHC card

1. Open the SD card door.

2. While paying attention to the orientation of the SDHC card or the microSDHC card, insert it to the end until a "click" sound is heard. Then, close the SD card door.

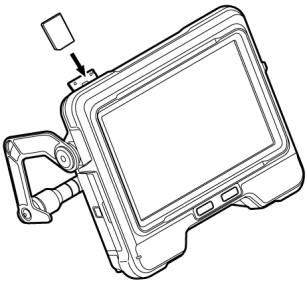

SDHC card

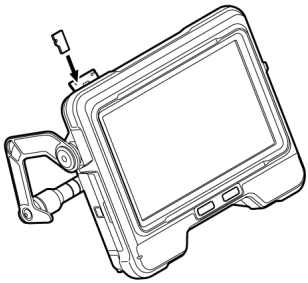

microSDHC card

Removing the SDHC card or the microSDHC card

Push in the SDHC card or the microSDHC card once to remove the card.

3.6 Attaching and removing the remote control unit

1. **Open the interface door *(A)*.**

2. **Connect the remote control unit to the USB connector *(B)*.**

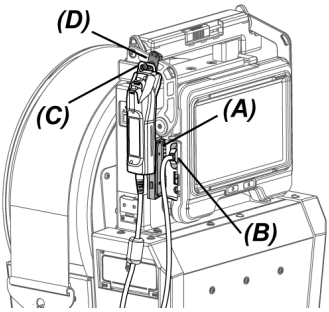

TIP:

- Hanging the hanger for attaching the base unit ***(C)*** of the remote control unit over the hook ***(D)*** for attaching the remote control unit of the base unit allows you to attach the remote control unit to the base unit.
- If you attach the remote control unit to the base unit when the <REMOTE CONTROLLER VIBRATION> menu is set to <ON>, the remote control unit vibrates when it becomes available.
- One USB connector is equipped with the base unit. Connecting the USB hub (commercially-available) to the USB connector allows you to use the remote control unit and the USB wireless LAN adapter at the same time. Use the commercially-available USB hub that supports USB 2.0. Do not connect two or more remote control units to the USB hub.

Removing the remote control unit

Remove the remote control unit in the reverse order of the attaching procedures.

Store the removed remote control unit in the carrying case according to procedures described in "Storing in the carrying case" (page 135).

3.7 Attaching and removing the guide head

Attaching the guide head to the distal end of the insertion tube makes it easy to insert the insertion tube.

TIP:

You can attach the guide head when using the forward-view optical adapter.

There are two types of guide head: One for optical adapter 120D and the other for optical adapter 220D. The guide head for optical adapter 120D has a positioning hole ***(A)***.

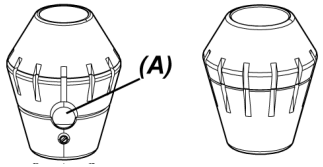

For 120D For 220D

Attaching the guide head (when using the optical adapter 120D)

Be sure to use the guide head for optical adapter 120D.

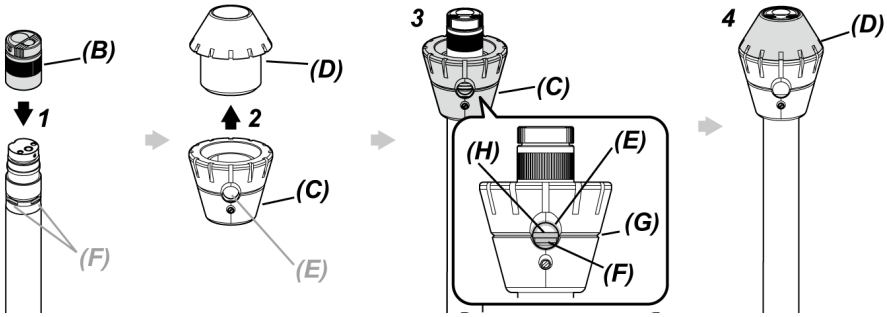

1. **Attach the optical adapter *(B)* to the distal end.**

* For detail operations, see "Attaching and removing the optical adapter" (page 54).

2. **Rotate the cap *(D)* to remove it from the base *(C)* of the guide head.**

3. **Insert the base *(C)* into the distal end from the smaller diameter. Align the groove *(G)* of the guide head with the groove *(H)* of the insertion tube so that one of the D cuts (4 positions) *(F)* of the distal end is visible from the hole *(E)* of the guide head, and hold the base and insertion tube.**

It does not matter which of the four D cuts ***(F)*** is used.

4. Insert the cap *(D)* into the distal end and rotate it to attach to the base.

If it is difficult to rotate the cap ***(D)***, there is a possibility that the position of the hole ***(E)*** of the guide head is not aligned with the position of the D cut ***(F)*** of the distal end. Align the positions again and rotate the cap ***(D)***.

Attaching the guide head (when using the optical adapter 220D)

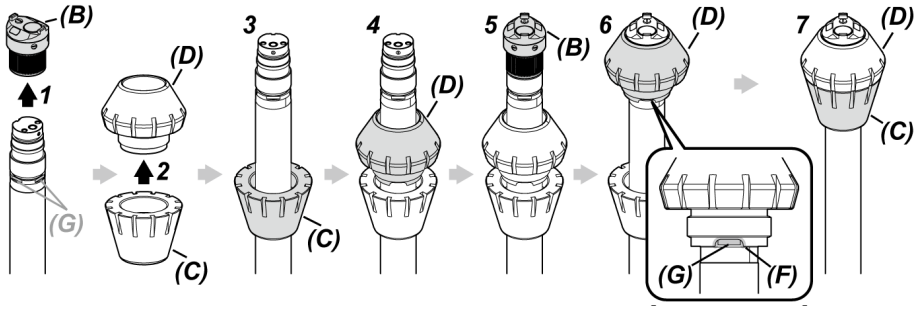

1. Remove the optical adapter *(B)* from the distal end.

* For detail operations, see "Attaching and removing the optical adapter" (page 54).

2. Rotate the cap *(D)* to remove it from the base *(C)* of the guide head.

3. Insert the base *(C)* into the distal end from the smaller diameter.

4. Insert the cap *(D)* into the distal end.

5. Attach the optical adapter *(B)* to the distal end.

* For detail operations, see "Attaching and removing the optical adapter" (page 54).

6. Align the notch *(F)* of the cap *(D)* with one of the D cuts (4 positions) *(G)*, and hold the base and insertion tube.

It does not matter which of the four of D cuts ***(G)*** is used.

7. Align the base *(C)* with the cap *(D)*, and rotate it to attach to the base.

If it is difficult to rotate the base ***(C)***, there is a possibility that the position of the notch ***(F)*** of the cap ***(D)*** is not aligned with the position of the D cut ***(G)*** of the distal end. Align the positions again, and rotate the base ***(C)***.

NOTE:

Make sure that the guide head is attached to the distal end securely in order to prevent the guide head from falling off during operation.

Removing the guide head

Remove the guide head in the reverse order of the attaching procedures.

TIP:

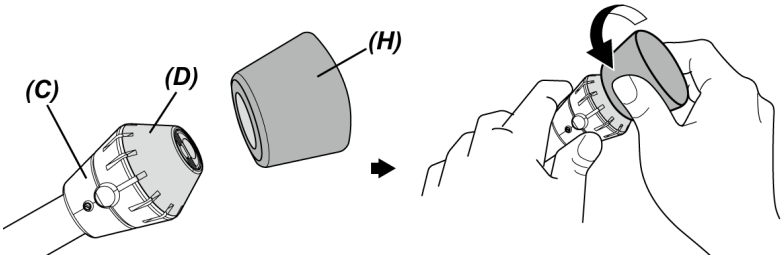

- When removing the 120D cap ***(D)***, press the guide head detachment tool ***(H)*** provided with the guide head against the cap. Hold the base ***(C)*** and the guide head detachment tool ***(H)*** firmly, and rotate the guide head detachment tool ***(H)*** counterclockwise together with the cap.
- A piece of rubber remains inside the guide head detachment tool ***(H)***, but there is no problem in use.

3.8 Connecting and disconnecting the USB wireless LAN adapter

Connecting the USB wireless LAN adapter

1. Open the interface door.

2. Attach the USB wireless LAN adapter (recommended) to the USB connector.

For the recommended USB wireless LAN adapter, please contact us.

TIP:

- One USB connector is equipped with the base unit. Connecting the USB hub (commercially-available) allows you to use the remote control unit and the USB wireless LAN adapter at the same time.
- Use the commercially-available USB hub that supports USB 2.0.

Removing the USB wireless LAN adapter

To remove the USB wireless LAN adapter, follow the steps for attaching the USB wireless LAN adapter in the reverse order.

3.9 Attaching and removing the pole unit

Using the pole unit allows you to secure the base unit at the high position for operation.

Attaching the pole unit

1. Assemble the pole unit.

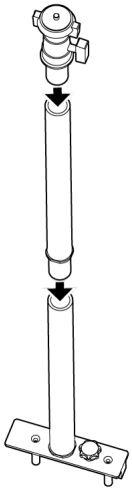

2. Open the handle cover of the drum unit and remove the base unit.

For detail operations, see "Attaching and removing the base unit" (page 46).

3. **Insert the pole unit so that the attaching pins *(B)* of the base of the pole unit align with the pole mounting holes *(A)* of the handle cover, and tighten the fixing knob *(C)*.**

Insert the pole unit so that the fixing knob ***(C)*** is positioned as shown in the picture below. If the pole unit is attached in wrong orientation, you cannot tighten the fixing knob.

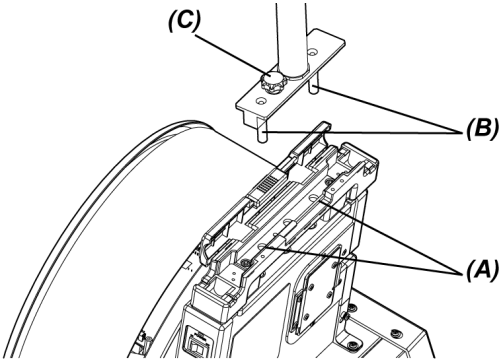

4. **Loosen the clamp *(D)* of the camera platform at the top of the pole unit, align the tripod mounting hole *(F)* of the base unit with the clamping screw *(E)*, and rotate the clamping ring *(G)* to secure the base unit.**

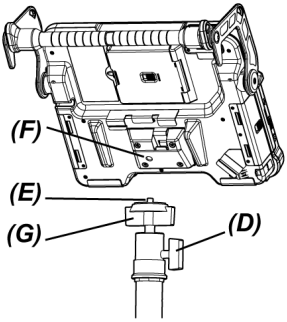

⚠CAUTION:

Be sure to attach the base unit to the camera platform securely to prevent it from falling, which may cause injury or damage to the unit as a result.

5. **Adjust the base unit to your desired angle, and tighten the clamp *(D)* of the camera platform.**

Removing the pole unit

Remove the pole unit in the reverse order of the attaching procedures.

3.10 Attaching and removing the push rod adapter

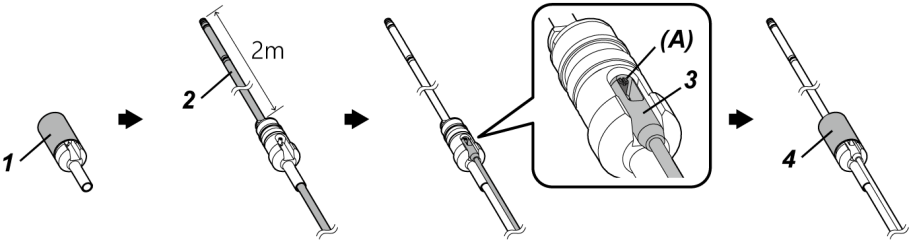

1. **Rotate the cap to remove it from the push rod adapter.**

2. **Put the insertion tube through the push rod adapter.**

⚠CAUTION:

Attach the push rod adapter at the position approximately 2 m away from the distal end of the insertion tube. The reason is to protect the angulation section or to prevent the push rod adapter from falling off.

3. **Hook the push rod (commercially-available) on the push rod pin *(A)*.**

4. **Attach the cap to the push rod adapter and rotate it to tighten it.**

The insertion tube and the push rod are secured to the push rod adapter.

Removing the push rod adapter

Remove the push rod adapter in the reverse order of the attaching procedures.

After the cap is removed from the push rod adapter, you may find it difficult to remove the push rod adapter from the insertion tube. In this case, hold the insertion tube with one hand, move the push rod adapter in the direction opposite to the removal direction with the other hand, and remove it.

3.11 Attaching and removing the centering device

Inserting the insertion tube into the pipe by attaching the centering device to the insertion tube allows you to position the distal end at the center of the pipe.

There are two sizes of plates for the centering device. The applicable diameter of the pipe is ø80 mm or more for small plate and ø150 mm or more for large plate.

NOTE:

- The centering device is a consumable item. It will wear out after repeated use.
- The centering device may come into contact with surroundings during use, which may cause wear powder to fall inside the pipe. Do not use the centering device if the wear powder causes problems for inspection objects.

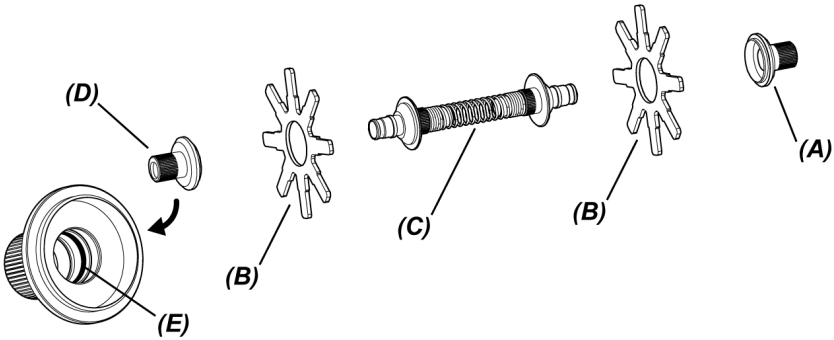

No.	Name
(A)	Cap (without O-ring)
(B)	Plate
(C)	Main body
(D)	Cap (with O-ring ***(E)***)
(E)	O-ring

1. Remove the optical adapter from the distal end.

* For detail operations, see "Attaching and removing the optical adapter" (page 54).

2. Assemble the cap *(A)*, plate *(B)* (one piece) and the main body *(C)*.

The cap without O-ring attached inside is the cap ***(A)***.

You can attach the plate ***(B)*** and the main body ***(C)*** to the cap in either direction.

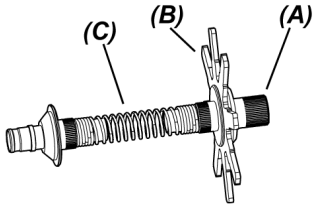

3. **Insert the parts assembled in the Step *2* into the insertion tube *(F)* as shown below, and move it to the position just passing the fixing groove *(H)* of the angulation section *(G)*.**

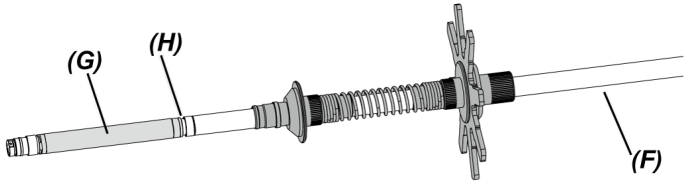

4. **Insert the other plate *(B)* into the insertion tube, and position it in contact with the parts assembled in the Step *3*.**

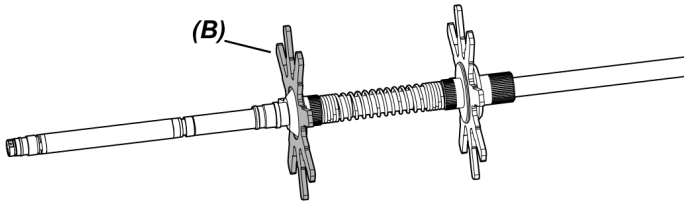

5. **Insert the cap *(D)* into the insertion tube, and fit the surface *(I)* of the cap *(D)* with the fixing groove *(H)* at the base of the angulation section.**

The cap with O-ring ***(E)*** attached inside is the cap ***(D)***.

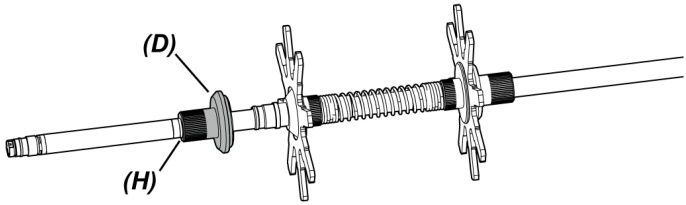

TIP:

When the surface ***(I)*** of the cap ***(D)*** is fitted with the fixing groove ***(H)*** at the base of the angulation section, the ***(J)*** part is engaged with the fixing groove ***(H)*** and the centering device position is determined.

When the cap ***(D)*** is inserted into the insertion tube

When the cap ***(D)*** is fit with the fixing groove of the insertion tube

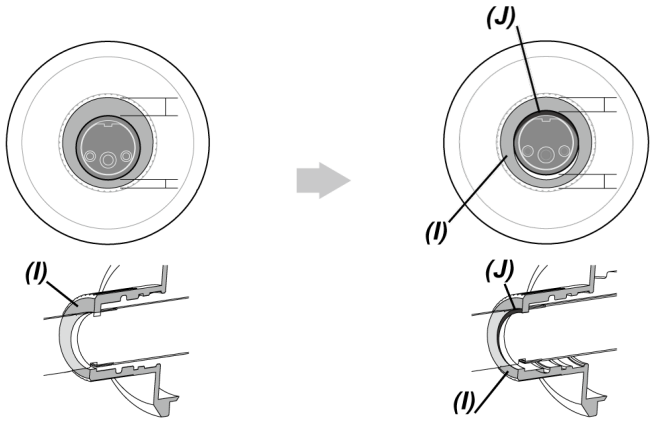

6. Attach the parts assembled in the Step *5* to the cap *(D)*.

As the cap ***(D)*** is a 2-thread type screw, the screw is engaged twice.

When the centering device is attached to the insertion tube securely, all are secured except plates.

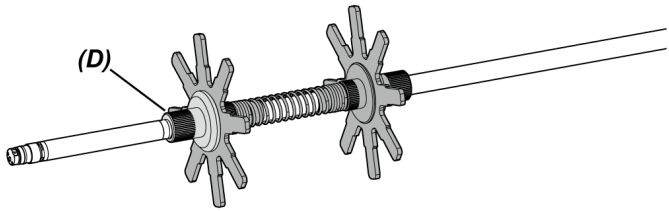

7. Attach the optical adapter to the distal end of the insertion tube.

* For detail operations, see "Attaching and removing the optical adapter" (page 54).

⚠CAUTION:

Make sure that the centering device is attached to the insertion tube securely in order to prevent the centering device from falling off during operation.

Removing the centering device

Remove the centering device in the reverse order of the attaching procedures.

NOTE:

- If foreign substances such as sand, etc. are attached to the centering device after use, remove them immediately.
- If foreign substances are attached to the centering device, the centering device may not be pulled out from the insertion tube.

TIP:

- Each petal of the plate has a small protrusion ***(K)*** as shown in the picture. When the protrusion (K) on the petal is gone due to the wear of the plate, it is time to replace the plate. Replace the plate according to the wear degree.

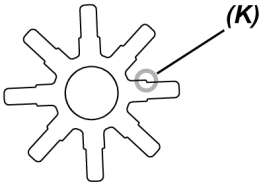

- If the O-ring has a crack or dropped out, replace the O-ring with a spare one.
- When replacing the O-ring, remove the O-ring from the cap using the small screwdriver, etc.

3.12 Pre-operation / Post-operation inspections

NOTE:

- When inspecting the insertion tube, be sure to hold it at the position behind the angulation section. Otherwise, the angulation section may be damaged.
- Also, be sure to check the inspection items after using the instrument.

Inspection location	Item	If abnormality is discovered
Overall	☐ Are foreign objects such as dirt or sand attached to the LCD monitor, insertion tube or doors?	"Storage and maintenance" (page 130)
	☐ Are there cracks or scratches on the LCD monitor, insertion tube or doors?	Replacement required. Contact us.
	☐ Any irregularities such as damage to or deformation of the exterior materials, buttons, joysticks, or levers?	
	☐ Any cuts, buckling or other abnormalities on the cable?	
Insertion tube, angulation section, distal end	☐ Any looseness in materials other than the angulation section?	"Storage and maintenance" (page 130)
	☐ Any dirt or water droplets on the objective lens of the distal end? Continued use in this condition creates the risk of damage to the optical adapter and/or distal end.	
	☐ Any build up of dirt on the optical adapter	

Inspection location	Item	If abnormality is discovered
	positioning groove or screw threads of the distal end?	
	□ Any distal end deformation or looseness, or unusual wear of connecting screw thread? Never use the instrument while there is any looseness on the distal end. Otherwise, the loose parts may fall off.	"Storage and maintenance" (page 130)
O-ring	□ Is the O-ring missing, broken, etc.? If the O-ring is detached or broken, water may enter through the joint between the distal end and the optical adapter, and this may result in the malfunction or damage of the unit.	"Storage and maintenance" (page 130)
Optical adapter	□ Are there dirt or water droplets on the outer surface of the optical adapter or the objective lens in the optical adapter? Continued use in this condition creates the risk of damage to the optical adapter and/or distal end.	"Storage and maintenance" (page 130)
	□ Any deformities or foreign objects in the connecting screw thread of the optical adapter? Note that insufficient cleaning may result in a loss of water tightness between the optical adapter and the distal end.	
	□ Are the components of the optical adapter loose? Never use the unit if any looseness is found. Otherwise, the loose parts may fall off.	
LCD monitor	□ Any surface cracks or other abnormalities on the screen? **TIP:** The LCD monitor is manufactured based on precision technologies. The LCD monitor may contain pixels that do not light (visible as black dots) or light permanently (visible as bright dots). This does not indicate a defect or malfunction of the product.	Replacement required. Contact us.
	□ Any fingerprints or other soiling on the	"Storage and

Inspection location	Item	If abnormality is discovered
	screen?	maintenance" (page 130)
Drum unit	□ Is the circular plate of the drum rotator deformed?	Contact us.
	□ Is the insertion tube wrapped around the drum evenly? If the insertion tube is wrapped collectively around one place, the insertion tube may be caught in the drum unit.	"Attaching the scope unit" (page 41)
Carrying case	□ Any damage, looseness or other irregularities on the exterior, handle, latch, extendable handle, caster, or other parts of the carrying case?	Contact us.
	□ Are you using the designated carrying case? Use of a non-designated carrying case may cause the product to be damaged or malfunctioned.	

Inspection of optional units

Inspection location	Item	If abnormality is discovered
Battery	□ Any fluid leakage, deformation, cracks or other abnormalities of the battery?	Contact us.
External battery	□ Any fluid leakage, deformation, cracks or other abnormalities of the external battery?	Use the external battery containing no abnormality
Pole unit	□ Are any parts loose? Never use the unit if any looseness is found. Otherwise, the product may be damaged or broken.	"Attaching and removing the pole unit" (page 61)
Guide head	□ Are any parts loose? Never use the unit if any looseness is found. Otherwise, the loose parts may fall off.	See "Attaching and removing the guide head" (page 57).
Push rod adapter	□ Are any parts loose? Never use the unit if any looseness is found. Otherwise, the loose parts may fall off.	See "Attaching and removing the push rod adapter" (page 63).
Centering device	□ Any significant damage, deformation or looseness on each parts, or unusual wear on plates? Never use the unit if any looseness is found. Otherwise, the loose parts may fall off.	See "Attaching and removing the centering device" (page 63).

4. Basic operation

4.1 Turning ON the power

4.1.1 Turning ON the power

1. Turn ON the main switch of the drum unit.

[POWER]LED on the drum unit turns ON in orange.

2. Press the [POWER] button (⏻) on the base unit for approx. 1.5 to 2 seconds.

The power of the system turns ON, and [POWER]LED on the drum unit turns ON in blue.

The screen to select the adapter appears approx. 10 seconds after the [POWER] button (⏻) is pressed.

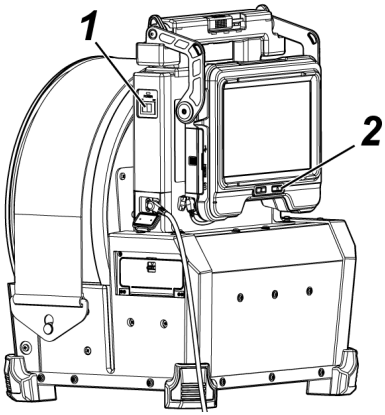

TIP:

- When the remote control unit is connected, buttons turn ON if the power of the system turns ON.
- If the angulation speed icon (FAST/SLOW) is blinking when the power of this instrument turns ON, the compressor is being filled up with air. Please wait until the angulation speed icon turns ON.

  If the angulation speed icon is blinking fast, the compressor is being filled in high speed, and if the angulation speed icon is blinking slowly, the compressor is being filled in low speed. The time required to complete filling the compressor differs depending on the temperature of the battery or the external battery.
- In general, the performances of the battery and the external battery are degraded temporarily as the ambient temperature drops. Note that the battery and the external battery performances degraded due to the low temperature recovers when the temperature rises to a normal level.

Turning OFF the power

1. Press the [POWER] button (⏻) of the base unit for 2 seconds or longer.

The power of the system turns OFF, and [POWER]LED on the drum unit turns ON in orange.

TIP:

You can also turn OFF the power of the base unit by pressing the [THUMBNAIL] button and the [CENT] button for 2 seconds or more at the same time. When the power of the system turns OFF, the buttons on the remote control unit turn OFF.

2. Turn OFF the main switch of the drum unit.

[POWER]LED on the drum unit turns OFF.

4.1.2 Selecting an optical adapter

When the power is turned ON, a list of optical adapters is displayed.

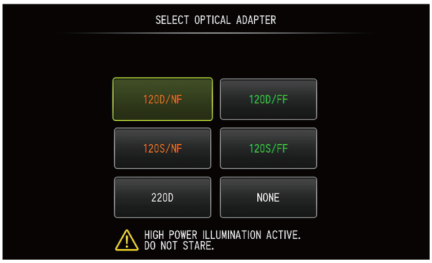

Select the optical adapter to use, and press the [MEAS/ENTER] joystick.

TIP:

If the optical adapter is replaced during observation, reselect the new optical adapter on the menu screen.

See "Menu operations" (page 103) and "Initial setting menu" (page 105).

4.2 Checking the remaining battery level and the remaining external battery level

If the battery and/or the external battery (both or alone) is connected to this instrument, the indicator that shows remaining battery level and/or the remaining external battery level is displayed at the top right corner of the LCD monitor. The indicator is displayed in green when the power is supplied by the battery or the external battery, and it is displayed in white when the power is not supplied by the battery or the external battery. The indicator is displayed in red when the remaining battery level and/or the remaining external battery level is low. The estimated remaining battery level and/or the remaining external battery level are shown below.

Indicator (Battery)	Indicator (External battery)	State of battery and/or external battery
	Ext	Remaining level is sufficient (100% to 50%).
	Ext	Remaining level is low (50% to 30%).
	Ext	Remaining level is low (30% to 10%).
*1	Ext *1	Remaining level is almost depleted (10% to 5%).
*2 Blinking	Ext *2 Blinking	Remaining level is depleted (5% to 0%).

*1 Do not record or delete images, or format the SDHC card or microSDHC card. If the power runs out during these operations, data could be corrupted.

*2 If the battery indicator or the external battery indicator brinks, quickly turn OFF the power and replace with the filled up battery or external battery, or connect the AC adapter.
If you continue to use the instrument without connecting the AC adapter, the power will be shut down and may cause damage to the recorded data.

TIP:

- The remaining battery level can also be checked on the [POWER INDICATOR] of the battery. (Note the remaining battery level shown on the LCD monitor is different from that shown on the battery indicator.) For details, see "Checking the remaining battery level (on battery alone)" (page 49).
- If the battery and the external battery are connected to this instrument, the power is supplied by the battery first. When the remaining battery level is depleted, the power is supplied by the external battery automatically.
- If the battery and/or the external battery is displayed in yellow, the temperature of the battery and/or the external battery is too high. Wait until the temperate becomes the appropriate level.

4.3 Turning ON the illumination

⚠CAUTION:

Do not stare at the illumination light. Otherwise, your eyes may get injured.

4.3.1 Checking the lighting of the illumination at the distal end of the insertion tube

The light intensity is adjusted depending on the brightness of the inspection object.

TIP:

Always turn OFF the [LIGHT] button (☼) of the base unit when the instrument is not in use, such as when replacing the optical adapter, etc.

Turning ON/OFF the illumination manually

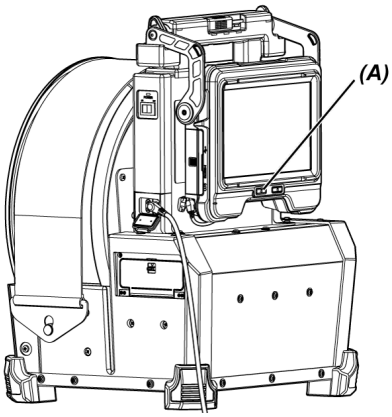

Pressing the [LIGHT] button (☼) ***(A)*** turns ON or OFF the illumination.

When the illumination turns ON, the LED icon (ON/ECO) is displayed on the LCD monitor.

TIP:

Long-pressing the [VIEW] button on the remote control unit allows you to switch the illumination in the order of turning ON (high beam), normal beam (eco) and turning OFF.

Switching between the high beam and the normal beam

Long-pressing the [LIGHT] button (☼) switches between the high beam and the normal beam (eco).

Type	Description
High beam	Brightness when in normal use
Normal beam (eco)	Darker than high beam, but the battery or the external battery lasts longer. If the ambient temperature of the distal end becomes high, the illumination changes to normal beam (eco) automatically.

4.4 Operating the instrument

This instrument can be operated using the buttons, levers and joysticks on the remote control unit as well as the touch panel on the base unit.

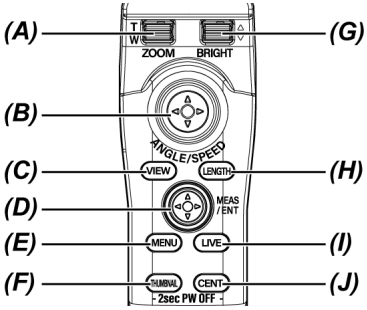

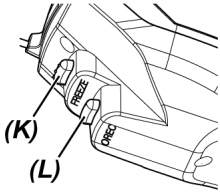

	Buttons, Levers and Joysticks	Function	Touch panel
(A)	[ZOOM] lever	Uses the zoom function.	ZOOM X1.0 T W
		Skips (backward and forward) to the index mark positions when playing back or pausing a movie on the view screen.	/
(B)	[ANGLE/SPEED] joystick (press)	Switches the angulation speed of the distal end of the insertion tube.	-
	[ANGLE/SPEED] joystick (joystick operation)	Operates the angulation of the distal end of the insertion tube.	
(C)	[VIEW] button	Displays the view screen when there is a still image file in the selected folder. (Tapping this button while the view screen is displayed will show the live screen.)	VIEW
	[VIEW] button (long-press)	Switches the illumination in the order of turning ON (high beam), normal beam (eco) and turning OFF.	-
(D)	[MEAS/ENTER] joystick (press the button)	Selects the menu, etc. Decides the specified point on the measurement screen. Decides the layout of the note information on the note display screen.	-
		Adds the index marks while recording the movie.	INDEX

	Buttons, Levers and Joysticks	Function	Touch panel
		Displays the scaler measurement screen.	MEASURE
		Pressing this button while playing back the movie on the view screen will pause or resume playing back the movie.	-
	[MEAS/ENTER] joystick (joystick operation)	Selects a menu. Switches the selected image on the thumbnail screen.	Tap on the screen
		Switches a destination folder to save the image on the live screen. Moves the cursor or note information.	
		Displays the previous image by operating this joystick to the left and displays the next image by operating this joystick to the right on the view screen.	/
		When playing back the movie on the view screen, operating the joystick upward (downward) allows to perform fast forward (fast reverse) respectively	/
(E)	[MENU] button	Shows or hides the menu screen.	MENU
		Pressing this button while displaying the constant video playback screen or the note display screen switches the touch panel monitor display between "Operating with the touch panel and the [MEAS/ENTER] joystick" and "Operating with only the touch panel".	-
(F)	[THUMBNAIL] button	Displays the thumbnail screen. (Tapping this button while the thumbnail screen is displayed will show the live screen.)	THUMBNAIL
(G)	[BRIGHT] lever	Changes the brightness setting.	BRT 6
		Adjusts the sound volume on the view screen or the constant video playback screen.	Vol 7
		On the thumbnail screen, operating this lever upward shows or hides the mark (✔) of the selected thumbnail image.	-

	Buttons, Levers and Joysticks	Function	Touch panel
		Operating this lever downward shows or hides the mark (✓) of all thumbnail images.	
(H)	[LENGTH] button (short-press)	Shows the length setting dialog.	S:0.0m
	[LENGTH] button (long-press)	Switches the rotation mode according to the gravity direction of the live image.	Tap the center of the live screen.
(I)	[LIVE] button (except live screen)	Displays the live screen.	LIVE
	[LIVE] button (live screen)	Switches the gain mode.	GAIN
(J)	[CENT] button	Centers the distal end of the insertion tube.	Tap the center of the screen when the angulation operation button is displayed.
(K)	[FREEZE] button	Freezes or unfreezes the observation image. Records a still image when movie recording is in progress.	FRZ / CAPTURE
(L)	[RECORD] button (short-press)	Records a still image. Ends recording the sound during sound recording. Ends recording the movie during movie recording.	REC
	[RECORD] button (long-press)	Starts recording the movie.	REC
(E) + ***(I)***	[MENU] button + [LIVE] button (press at the same time)	Turns ON or OFF the LCD monitor. Even while the LCD monitor is turned OFF, the constant video is recorded. When you turn ON the power again, the live screen is displayed.	-
(F) + ***(J)***	[THUMBNAIL] button + [CENT] button (press for 2 seconds or more at the	Turns OFF the base unit.	-

	Buttons, Levers and Joysticks	Function	Touch panel
	same time)		
-	-	Switches the folder.	
-	-	Shows, moves or hides the [CURSOR/OK] button.	ON

TIP:

If multiple functions are assigned to the button, the time to press the button distinguishes each function. In this manual, the term “press” or “short-press” is used to indicate pressing a button for a short duration, while “long-press” means holding down a button approx. one second.

In this instruction manual, the descriptions are based on operations using the buttons, levers and joysticks.

4.5 Observing the inspection object

1. **Turn ON the illumination.**

2. **While looking at the live image, insert the insertion tube into the inspection object.**
   Insert the insertion tube carefully while checking the insertion direction.

3. **Use the [ANGLE/SPEED] joystick to perform angulation operations and observe the applicable areas.**
   Be careful not to apply the excessive pushing force, twisting or tension to the insertion tube.
   Adjust and record the image if necessary.

4. **While looking at the live image, pull out the insertion tube from the inspection object slowly and carefully.**

NOTE:

- If the following message appears during inspection, immediately stop observation, carefully pull out the insertion tube, and perform the required action as instructed in "Error messages" (page 123).
  - <HIGH TEMPERATURE (DISTAL END). PLEASE IMMEDIATELY PULL OUT THE INSERTION TUBE>
- When operating the angulation section, do not bend the insertion tube to its minimum bending radius (50 mm) or less.
- A yellow distal end temperature indicator appears when the ambient temperature of the distal end reaches approx. 90 °C. Be careful that this indicates that the upper limit of the ambient operating temperature is approaching.
- If the following message appears, display the angulation operation button on the LCD monitor and tap the center of the screen to center the distal end, or press the [CENT] button on the remote control unit to center the distal end.
  - <PLEASE CENTER THE DISTAL END BY PRESSING THE CENTER BUTTON.>

  If you keep pulling the insertion tube without centering the distal end, the distal end may be caught in something to damage the product or the inspection object.
- For cautions when attaching the centering device to the insertion tube, see "Attaching and removing the centering device" (page 63).

TIP:

- Keep the insertion tube as straight as possible until it reaches 2 m from the distal end to get the best angulation performance.
- When the ambient temperature of the distal end reaches approx. 88°C, the following message appears and the illumination changes from the high beam to the normal beam (eco).
  - <ILLUMINATION MODE CHANGED TO ECO.>

  When the illumination mode changes to eco, the Illumination becomes darker, but you can continue observation. To return to the high beam, move the distal end to the place with low ambient temperature, wait for a while, and long-press the [LIGHT] button (☼).
- Pressing the [ANGLE/SPEED] joystick switches the angulation speed of the distal end of the insertion tube.
- If the distal end of the insertion tube cannot be bent, the angulation speed icon (FAST/SLOW) blinks.

  If the angulation speed icon is blinking, the compressor is being filled up with air. Please wait until the angulation speed icon turns ON.

  If the icon blinks turning ON for three seconds and OFF for one second repeatedly, the remaining battery level and/or the remaining external battery level is extremely low and also the temperature of the battery and/or the external battery is too high or too low. You cannot fill the compressor with air. Recharge the battery or the external battery, or wait until its temperate becomes the appropriate level.
- If you operate the [ANGLE/SPEED] joystick in the ◀ direction, the distal end of the insertion tube bends as ***(B)***.

  In order to bend the insertion tube as ***(C)*** from ***(A)***, press the [CENT] button once and operate the [ANGLE/SPEED] joystick in the ▲ direction.

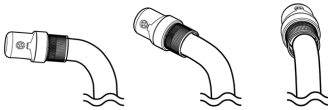

(A) ***(B)*** ***(C)***

- The drum unit is equipped with the lock belt for securing the insertion tube. Release the lock belt when inserting or pulling out the insertion tube.

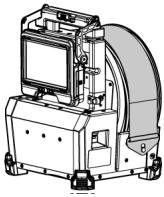

When the lock belt is secured

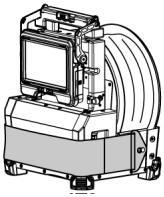

When the lock belt is released

4.6 Adjusting the display of the live image

4.6.1 Still image (Freeze)

1. While the live image is displayed, press the [FREEZE] button.

The observed image is frozen and the freeze icon (F) is displayed in the upper right corner of the LCD monitor. Do not insert or pull out the insertion tube while the image is frozen.

2. Press the [FREEZE] button.

The image will be unfrozen.

TIP:

Freezing a live image that contains rapid movement may result in a blurred image.

4.6.2 Enlarging the image (Zoom)

Operating the [ZOOM] lever upward zooms (enlarges) the image by up to 5 times.

To restore the image to the original size, operate the [ZOOM] lever downward.

TIP:

Images are zoomed using the “digital zoom” function. Therefore, the image may become slightly coarse at higher zoom factors. The recorded still image may become less coarse when [MENU] - <IMAGE MODE> - <DYNAMIC NOISE REDUCTION> is set to <ON>.

4.6.3 Adjusting the brightness

Adjusting the brightness using the [BRIGHT] lever

The [BRIGHT] lever is used to adjust the brightness when changing the entire brightness of the live image during observation.

Operating the [BRIGHT] lever upward brightens the entire image and downward darkens the entire image respectively.

Brightness can be adjusted to one of the 24 different levels.

Switching the gain mode

Pressing the [GAIN] button while a live image is displayed switches the gain mode.

Mode	Description
Auto (No Display)	This mode automatically adjusts the brightness according to the settings of [BRIGHT]. However, the noise may increase depending on the [BRIGHT] settings.

Mode	Description
[WiDER1]	This mode is used for displaying live images at a level brighter than Auto (No Display). However, the noise may increase under certain observation conditions.
[WiDER2]	This mode is used for displaying live images at a level brighter than [WiDER1]. However, the noise may increase under certain observation conditions.
[Manual]	This mode is for observation at a fixed brightness level according to the [BRIGHT] settings. Use this mode for observing moving objects. Noise may be less in this mode compared to other modes.

TIP:

The gain mode can also be changed by-pressing the [LIVE] button on the remote control unit.

4.7 Switching the folder on the live screen

TIP:

You can create a folder for recording and playing back the image. For details, see "File/folder operation menu" (page 115).

On the live screen, you can use the [MEAS/ENTER] joystick to switch the folder for recording and playing back the image.

1. Operate the [MEAS/ENTER] joystick while a live image is displayed.

The folder name shown in the upper left area of the screen will change.

The folder displayed will be the folder for the image to be recorded or played back.

TIP:

The folder configuration that can be switched using the [MEAS/ENTER] joystick is up to the second layer.

4.8 Recording images

You can record the images being observed to a SDHC card as still images or movies. Use the provided SDHC card or the SDHC card recommended by us.

SD and SDXC cards cannot be used.

Make sure that the SDHC card is correctly loaded before use.

TIP:

The microSDHC card is used for constant videos.

For details, see "Using the constant video" (page 93).

4.8.1 Preparation for recording images

Be sure to format the SDHC card with this instrument before use. For details of formatting, see "<SD FORMAT>" (page 107).

The following table shows the approximate file size of a single image and the approximate number of images that can be recorded on a SDHC card.

Recording format / Recording time		Approximate size of a single file	Approximate number of images and time for recording (4 GB)
Still image		300 KB	13,200 images
Movie (per sec.)	30 f	650 KB	100 minutes
	60 f	1,300 KB	50 minutes
Audio (per sec.)		35 KB	-

Settings for recording images must be made on the menu screen. See "Menu operations" (page 103) and "Initial setting menu" (page 105).

Recording the screen display information

To record the information such as date/time, title, logo insertion length, gravity direction, etc. displayed on the screen onto the still image, make settings in <MENU> - <SYSTEM SETUP> - <DISPLAY>.

TIP:

Playing back the still image where date, title, and other information are overwritten may result in overlapping of date, time, title, logo, and other texts, but this is not a malfunction.

File marks

Setting the <FILE NAME MARK> menu to <ON> enables the following functions when recording images.

- Function to select save destination folders.
- Function to select file marks to be added to the end of file names.
- Function to select titles.

To enable adding the file marks, make the setting in [MENU] - <RECORD MODE> - <FILE NAME MARK>.

Image file names

The file names using the folder names of the save destination are assigned to images, and such images are recorded in the save destination folder in the SDHC card. You can change the file name to the name you desire (up to 30 alphanumeric characters and symbols).

Save destination folder name_?????.***

?????: File name sequential number (5 digits)
The file name sequential number is assigned sequentially from 00001 to 99999 in the order of recording.

***: Extension
".JPG" for still image files, ".WAV" for sound files and ".MP4" for movie files.

TIP:

- If the <FILE NAME MARK> menu is set to <ON>, you can add the letter "_A", "_B", "_C" or "_D" at the end of image file names. Use this function to categorize image files.
- The category names of the file marks can be changed. (Contact us for details.)

4.8.2 Recording the still image

1. Select the folder of the save destination.

Operate the [MEAS/ENTER] joystick to select the folder of the save destination. (See "Switching the folder on the live screen" (page 83).)

2. While the live image is displayed, short-press the [FREEZE] button.

The image is frozen.

3. While the frozen image is displayed, short-press the [RECORD] button.

4. **Confirm the folder name and select <YES>.**

If you want to change the folder, select <MODIFY> and change the folder of the save destination.

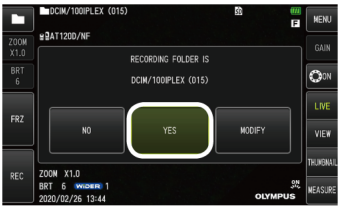

5. **Select the mark you want to add to the end of the file name of the image you are recording.**

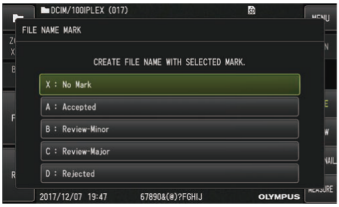

6. **Select the strings in the preset title list registered in advance.**

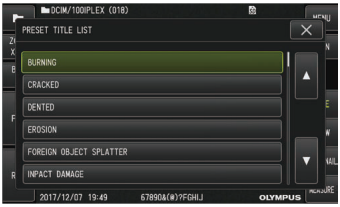

TIP:

For procedures to register the preset title in advance, see "Registering a text string as a preset title" (page 113).

7. **The still image is recorded. The screen goes black for a moment and then the frozen image is displayed.**

8. The sound recording starts after the recording of the still image completes.

While the sound recording is in progress, the recording sound icon (🎙) on the LCD monitor blinks. If [MENU] - <RECORD MODE> - <STILL AUDIO> is set to <OFF>, only the still image is recorded and the sound is not recorded.

9. Press the [RECORD] button to exit the sound recording.

TIP:

- If the <FILE NAME MARK> menu is set to <OFF>, Steps ***4*** to ***6*** will be skipped.
- If the <STILL AUDIO> menu is set to <OFF>, Steps ***8*** and ***9*** will be skipped.
- If the <STILL AUDIO> menu is set to <ON> and also the headset (commercially-available) is connected, the sound up to one minute can be recorded.
- The sound recording stops automatically whenever the SDHC card becomes full.
- Still images can be recorded in the internal memory.
  - However, the still images can be recorded in the internal memory only when a SDHC card is not inserted.
  - The internal memory can store up to approx. 20 still images.
  - Sound recording cannot be saved in the internal memory.
  - When an SDHC card is inserted, a [DCIM/INTERNAL] folder is automatically created and all image files are copied to that folder. When all images are copied, the images in the internal memory will be deleted.

4.8.3 Recording the movie

1. Select the folder of the save destination.

Operate the [MEAS/ENTER] joystick to select the destination folder for saving files. (See "Switching the folder on the live screen" (page 83).)

2. While the live image is displayed, long-press the [RECORD] button.

3. **Confirm the folder name and select <YES>.**

If you want to change the folder, select <MODIFY>, change the folder of the save destination and select <YES>.

4. **Select the mark you want to add to the end of the file name of the image you are recording.**

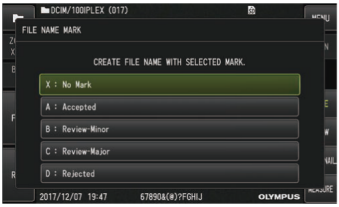

5. **Select the text strings in the preset title list registered in advance.**

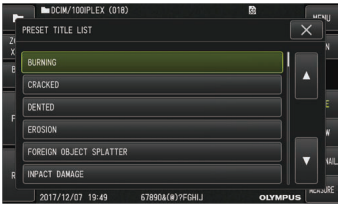

6. **After a still image is recorded, the movie recording confirmation dialog appears.**

7. Select <YES>.

The recording of the movie and the sound starts.

While the movie recording is in progress, the recording movie icon (●) on the LCD monitor blinks. If you select <NO> in the movie recording confirmation dialog, only the still image is recorded and the movie is not recorded.

If you select <CONTINUE> in the movie recording confirmation dialog, the movie is recorded and added after the movie that was recorded last. For details, see "Adding the movie" (page 89).

Short-pressing the [FREEZE] button while recording the movie allows you to record still images.

Pressing the [MEAS/ENTER] joystick while recording the movie allows you to add an index mark.

By adding index marks, you can skip to the mark positions backward or forward when playing back or pausing the movie.

8. Short-press the [RECORD] button to exit the movie recording.

When the movie recording completes, the blinking of the recording movie icon (●) disappears.

TIP:

- If the< FILE NAME MARK> menu is set to <OFF>, Steps ***3*** to ***5*** will be skipped.
- The sound can be recorded when the <STILL AUDIO> menu is set to <ON> and also the headset (commercially-available) is connected.
- The movie recording stops automatically whenever the SDHC card becomes full, or when the recording time reaches 120 minutes or when the file size reaches 4 GB.

4.8.4 Adding the movie

You can add the movie to the movie that was recorded last.

Selecting <CONTINUE> in the movie recording confirmation dialog enables to add the movie to the movie that was recorded last. If the SDHC card is inserted or removed, or the [VIEW] button is pressed, or the folder is changed between the image recording folder and the playback folder, you cannot select <CONTINUE>.

4.9 Playing back the image

The recorded images can be displayed in full screen view of a single image (View screen) or in multi-image view of thumbnail images (thumbnail screen).

The thumbnail screen shows multiple images in a list, which is useful when finding a particular image among a large group of images.

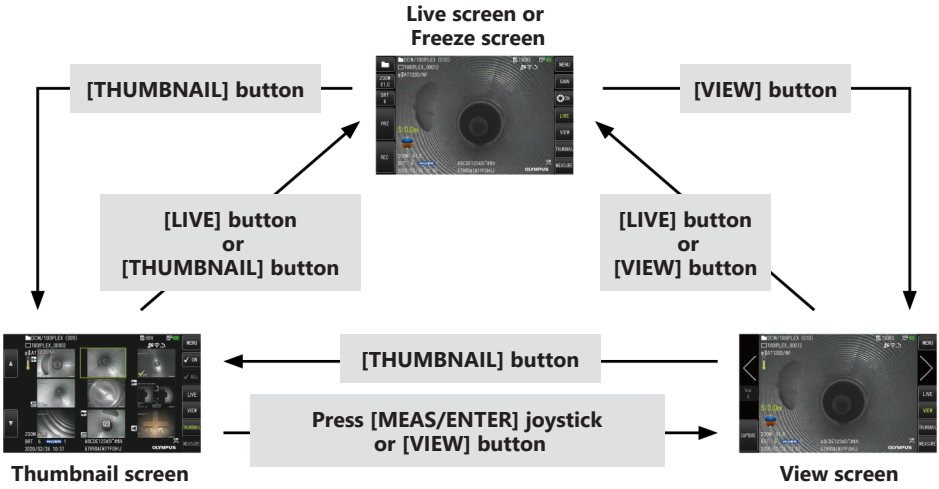

4.9.1 Playing back an image in a full-screen view (View screen)

1. Select the folder of the save destination.

For details of operations, see "Switching the folder on the live screen" (page 83).

2. Press the [VIEW] button on the live screen or the freeze screen.

The recorded image is displayed in a full-screen view.

3. Switch the image you want to play back.

Operate the [MEAS/ENTER] joystick to switch the image to play back.

- Operate the [MEAS/ENTER] joystick to the left.
  The previous image of the currently displayed image is displayed.
  When the first image is displayed in ascending order, the last image is displayed.
- Operate the [MEAS/ENTER] joystick to the right.
  The next image of the currently displayed image is displayed.
  When the last image is displayed in ascending order, the first image is displayed.

4. Press the [LIVE] button or the [VIEW] button to return to the live screen.

4.9.2 Displaying the thumbnail screen and selecting the played back image

The thumbnail screen shows multiple recorded movies and still images in a list (up to nine images per screen).

The thumbnail screen is useful when finding a particular image among a large group of images or when selecting multiple images to move and delete at a time.

1. Select the folder of the save destination.

For details of operations, see "Switching the folder on the live screen" (page 83).

2. Press the [THUMBNAIL] button on the live screen, freeze screen or view screen.

A multi-image view of recorded images is displayed (up to nine images per screen).

The movie icon ( ) appears for the movie.

The sound icon ( ) appears for the image containing the sound.

The note icon (N+) appears for the image containing the note information (text/mark/ free drawing).

The measurement icon ( ) appears for the measured image.

The constant video icon ( ) appears for the constant video.

To select a thumbnail image

Operate the [MEAS/ENTER] joystick to move the frame.

The framed image is the image being selected.

To play back an image

Select the image to play back, and press the [MEAS/ENTER] joystick.

The selected image is played back in a full-screen view.

To select or cancel selecting an image

If a thumbnail is selected using the [MEAS/ENTER] joystick, the view screen is displayed. It is, therefore, necessary to select the check-mark [ON] button on the touch panel in advance.

Pressing the [MEAS/ENTER] joystick on the framed thumbnail image under this condition displays a check mark ( ) at the lower left corner of the thumbnail image.

Alternatively, you can also display a check mark ( ) at the lower left corner of the thumbnail image by selecting an image using the [MEAS/ENTER] joystick and operate the [BRIGHT] lever upward.

Doing the same operation while a check mark ( ) is displayed at the lower left corner of the thumbnail image will cancel displaying the mark ( ).

To select or cancel selecting all thumbnail images

Operating the [BRIGHT] lever downward displays a check mark ( ) at the lower left corner of all thumbnail images.

To cancel displaying the check marks ( ) from all thumbnail images, operate the [BRIGHT] lever downward again.

To move or delete the selected image

A check mark ( ) is displayed at the lower left corner of the thumbnail image. Repeat this operation for all images you want to select, and move or delete images on the menu screen.

3. Press the [LIVE] button or the [THUMBNAIL] button to return to the live screen.

4.9.3 Sound attached to the still image

When the view screen is displayed, the sound is played back.

4.9.4 Playing back and pausing the movie

- Pressing the [MEAS/ENTER] joystick while playing back the movie will pause the movie.
- Operating the [MEAS/ENTER] joystick upward (or downward) plays back the movie in fast forward (or fast reverse). The fast forward (or fast reverse) speed can be adjusted up to four levels.
- Operating the [ZOOM] lever upward (or downward) on the movie where index marks are recorded will skip the mark position forward (or backward).
- Pressing the [MEAS/ENTER] joystick while pausing will resume playing back the movie.
- Pressing the [RECORD] button while pausing will record the image being paused as a still image.

4.10 Using the constant video

Constant video is a feature that automatically records movies up to about 50 minutes while the live screen is displayed.

The constant video can be recorded on a microSDHC card. Use the microSDHC card recommended by us.

microSD and microSDXC cards cannot be used.

Make sure that the microSDHC card is correctly loaded before use.

Note the following cautions before using the constant video.

- Due to features of the recording function, movies recorded approximately 50 minutes before or more will be deleted.
- Only the movies displayed on the live screen is recorded.
- If live images are displayed for 12 hours continuously while constant video is running, the constant video will not be recorded for approximately 5 seconds.
- Index marks cannot be recorded on constant video.

4.10.1 Preparation before recording the constant video

Be sure to format the microSDHC card with this instrument before use. For details for formatting, see "<microSD FORMAT>" (page 107).

1. **Mount a microSDHC card.**

2. **Select the menu - <RECORD MODE> - <CONSTANT VIDEO> and set to <ON>.**
   A constant video recording icon is displayed.

3. **To record the sound while recording the constant video, select the menu - <RECORD MODE> - <STILL AUDIO> and set to <ON>, and use a headset.**

4.10.2 Recording a constant video

Constant videos are recorded immediately after the constant video recording is set on the menu.

TIP:

Never attempt to remove the microSDHC card while the recording is in progress. Otherwise, the recorded data may be damaged.

4.10.3 Playing back a constant video

The recorded movies can be played back by selecting the menu - <PLAY CONSTANT VIDEO>.

For procedures to play back the constant video, see "Playing back and pausing the movie" (page 93).

4.10.4 Saving the constant video in an SDHC card

1. **Press the copy button on the constant video playback screen.**
   The constant video is copied to the SDHC card.

TIP:

- Movies are saved in the [DCIM/CONSTANTVIDEO] folder and displayed on the view screen and thumbnail screen.
- The estimated time required to copy the longest constant video (approx. 50 minutes) is as follows.
  - microSDHC card (Class 10) to SDHC card (Class 10): approx. 10 minutes

4.10.5 Deleting the constant video

Pressing the delete button on the constant video playback screen deletes the constant video.

4.11 Displaying live images on the external monitor

Live images can be displayed on the external monitor (commercially-available) by connecting the HDMI cable ***(A)*** (supplied) to the HDMI terminal inside the interface door.

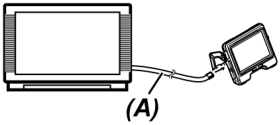

4.12 Displaying live images on the mobile terminal

The live image is displayed on the IPLEX Image Share screen when the wireless LAN connection is established with a mobile terminal (commercially-available) where IPLEX Image Share is installed.

To use IPLEX Image Share, install the application from Apple's App Store.

For details, refer to the our website.

https://www.olympus-ims.com/en/service-and-support/downloads/

- IPLEX Image Share comes with the following features.
    - Display of live images
    - Still image recording or movie recording of live images on the mobile terminal
    - Thumbnail display of recorded images and display of recorded images on the mobile terminal
    - Confirmation and change of connection settings

TIP:

- Up to 2 mobile terminals (commercially-available) can be connected at the same time.
- When the remaining battery level of the mobile terminal (commercially-available) is running low, the live image may not be updated, the movie recording may stop, or the still image recording and the movie recording may be disabled.
- Live images cannot be displayed on the mobile terminal while recording movies in a SDHC card.

4.12.1 Connecting the USB wireless LAN adapter

See "Connecting and disconnecting the USB wireless LAN adapter" (page 60).

4.12.2 Enabling the USB wireless LAN adapter from the menu

1. **Select the menu - <WIRELESS MODE> - <CONNECT> and set to <ON>.**

2. **Press <OK> when the SSID is displayed.**
   A wireless LAN icon appears on the LCD monitor screen and communication by this instrument starts.

3. **Set the SSID to be displayed when the above settings are made on the mobile terminal.**

4.13 Using recorded images on a PC

The images recorded with this instrument can be used on a PC using InHelp VIEWER.

The recorded images are loaded directly on the PC from the SDHC card where those images area recorded.

To use InHelp VIEWER, download it from the our website (https://www.olympus-ims.com/en/service-and-support/downloads/).

TIP:

Data on microSDHC cards cannot be loaded directly by a PC. For details, see "Using the constant video" (page 93).

4.14 Displaying the gravity direction

Using the acceleration sensor built in the distal end of the insertion tube, you can display the gravity direction on the live screen according to the tilt or rotation of the distal end of the insertion tube.

The gravity direction icon expresses the surface that is cut vertically against the inserting direction of the distal end of the insertion tube. The brown area indicates the ground side (gravity direction) and the blue area indicates the sky side (direction opposite to gravity).

The white circle in the icon indicates the center of the ground side (gravity direction) and the red circle indicates the center of the sky side (direction opposite to gravity).

TIP:

- The gravity direction icon is displayed when using the forward-view optical adapter.
- You can show or hide the gravity direction icon by selecting the menu - <SYSTEM SETUP> - <DISPLAY>.

4.15 Rotating the live images automatically

Using the acceleration sensor built in the distal end of the insertion tube, you can display the live image by rotating it so that the downward direction of the image always indicates the gravity direction.

There are two methods to rotate the image as shown below.

<AUTO-ORIENTATE> 	Rotates the live image according to the gravity direction. The displayed image contains the area without data (black area in the picture on the left).
<ZOOM-ORIENTATE> 	Rotates the live image according to the gravity direction, and displays the image by zooming digitally so that the area without data will not be contained. **TIP:** The image may become slightly coarse due to digital zoom.

Tapping on the live screen switches in the order of <AUTO-ORIENTATE>, <ZOOM-ORIENTATE> and <OFF>.

TIP:

- The rotation mode of the live image can also be changed on the <IMAGE ORIENTATION> menu.
- The rotation mode of the live image can also be changed by long-pressing the [LENGTH] button on the remote control unit.
- In <AUTO-ORIENTATE> or <ZOOM-ORIENTATE> mode, when the insertion tube is bent in proximity of the gravity direction or the direction opposite to gravity, the automatic rotation of the live image stops. At this time, the image rotation stop icon ( ) appears on the live screen, and if the <REMOTE CONTROLLER VIBRATION> menu is set to <ON>, the remote control unit vibrates.
- Display the angulation operation button on the LCD monitor and then tap the center of the screen, or press the [CENT] button on the remote control unit to automatically rotate the live image again.

4.16 Displaying the insertion length

You can display the insertion length information how long the distal end of the insertion tube is inserted into the observation object on the live image or the recorded image.

The insertion length is measured by the rotation of the drum unit.

The insertion direction is displayed by the + direction and the pulling out direction by the - direction respectively with the position when the system is turned ON or the position where the insertion length is reset as a reference point.

In addition, up to two passing points can be added to the current positions.

The formats or units for displaying the insertion length are shown below.

<LENGTH FORM>	<SECTION LENGTH> Displays the length from the reference point or the passing point.
	<COMBINED LENGTH> Always displays the length from the reference point.
<LENGTH UNIT>	<meter> Example: 30.0 m
	<foot/inch> Example: 98’5”

You can set the above on the <LENGTH FORM> menu or the <LENGTH UNIT>menu.

TIP:

You can show or hide the insertion length by selecting the menu - <SYSTEM SETUP> - <DISPLAY>.

The reference point and the passing points are set in the insertion length setting dialog. The insertion length setting dialog can be displayed by pressing the insertion length displayed on the live image.

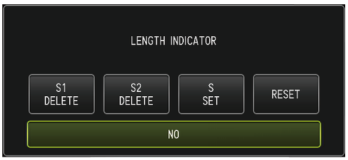

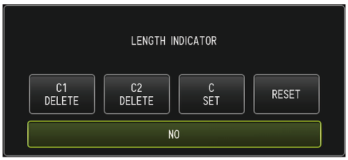

TIP:

The insertion length setting dialog can also be displayed by pressing the [LENGTH] button on the remote control unit.

Example 1

With the pipe as shown below, assume the case to start observation from the position A, set the elbows B and C as the passing points, and observe up to the position D.

The insertion length information (in meter) for each position is shown below.

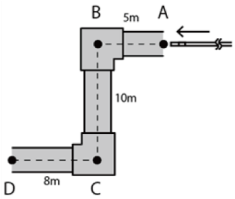

1. Turn ON the power of the system at the position A.

   (Or tap <RESET> at the position A.)

<SECTION LENGTH>	<COMBINED LENGTH>
S: 0.0 m	C: 0.0 m

2. Display at the position 2 m to the left from the position A

<SECTION LENGTH>	<COMBINED LENGTH>
S: 2.0 m	C: 2.0 m

3. Tap <S SET> or <C SET> at the position B.

<SECTION LENGTH>	<COMBINED LENGTH>
S1: 5.0 m S: 0.0 m	C1: 5.0 m C: 5.0 m

4. Display at the position 3 m below the position B

<SECTION LENGTH>	<COMBINED LENGTH>
S1: 5.0 m S: 3.0 m	C1: 5.0 m C: 8.0 m

5. Tap <S SET> or <C SET> at the position C.

<SECTION LENGTH>	<COMBINED LENGTH>
S1: 5.0 m S2: 10.0 m S: 0.0 m	C1: 5.0 m C2: 15.0 m C: 15.0 m

6. Display at the position D

<SECTION LENGTH>	<COMBINED LENGTH>
S1: 5.0 m S2: 10.0 m S: 8.0 m	C1: 5.0 m C2: 15.0 m C: 23.0 m

Example 2

With the same pipe used in Example 1, the displays when setting the passing points at elbows and clearing each passing point are shown below.

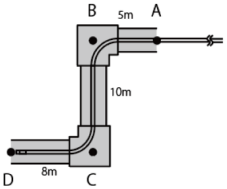

Tapping <S2 DELETE> or <C2 DELETE> at the position D will delete the information of the passing point C that was set second.

<SECTION LENGTH>	<COMBINED LENGTH>
S1: 5.0 m	C1: 5.0 m
S2: 10.0 m	C2: 15.0 m
S: 8.0 m	C: 23.0 m

<SECTION LENGTH>	<COMBINED LENGTH>
S1: 5.0 m	C1: 5.0 m
S: 18.0 m	C: 23.0 m

Tapping <S1 DELETE> or <C1 DELETE> at the position D will delete the information of the passing point B that was set first and display the information of the passing point C at S1 or C1.

<SECTION LENGTH>	<COMBINED LENGTH>
S1: 5.0 m	C1: 5.0 m
S2: 10.0 m	C2: 15.0 m
S: 8.0 m	C: 23.0 m

<SECTION LENGTH>	<COMBINED LENGTH>
S1: 15.0 m	C1: 15.0 m
S: 8.0 m	C: 23.0 m

Tapping <RESET> at the position D will delete the passing points and the reference point, and display the position D as a new reference point.

<SECTION LENGTH>	<COMBINED LENGTH>
S1: 5.0 m	C1: 5.0 m
S2: 10.0 m	C2: 15.0 m
S: 8.0 m	C: 23.0 m

<SECTION LENGTH>	<COMBINED LENGTH>
S: 0.0 m	C: 0.0 m

4.17 Detecting when pulling out the bent angulation section

When the insertion tube is pulled out from the inspection object while the angulation section is bent, the message appears or the remote control unit vibrates.

TIP:

When the drum unit is rotated in the winding direction, it is detected that the insertion tube is pulled out while the angulation section is bent.

1. Display <SCOPE PROTECTION> in the <SYSTEM SETUP> menu on the live screen.

2. Select <ON>.

NOTE:

- If the following message appears during inspection, display the angulation operation button on the LCD monitor and tap the center of the screen to center the distal end, or press the [CENT] button on the remote control unit to center the distal end.
  - <PLEASE CENTER THE DISTAL END BY PRESSING THE CENTER BUTTON.>
- If you want to vibrate the remote control unit at the same time when the message appears, set the <REMOTE CONTROLLER VIBRATION> menu to <ON>.

5. Menu operations and functions

5.1 Menu operations

This instrument can be operated using the buttons and joysticks on the remote control unit as well as the touch panel on the base unit.

Operation using the buttons and joysticks on the remote control unit

1. Press the [MENU] button.

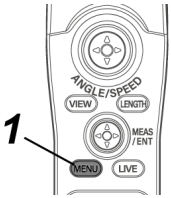

The menu screen is displayed.

2. Operate the [MEAS/ENTER] joystick up, down, left or right to select the menu item you want to run.

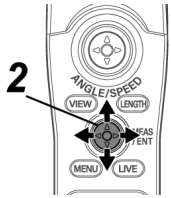

3. **Press the [MEAS/ENTER] joystick to apply the settings and return to the screen before displaying the menu.**

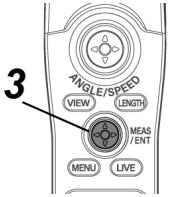

Using the touch panel

1. **Press the [MENU] button on the LCD monitor.**

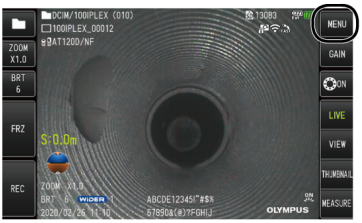

The menu screen is displayed.

2. **Press the menu button you want to run.**

Pressing the [RETURN] button ( ) during menu operations will return to the screen one screen before.

Pressing the [CLOSE] button ( ) during menu operations will return to the screen before displaying the menu.

5.2 Using the live screen or freeze screen

5.2.1 Initial setting menu

When you turn ON the power of this instrument, the live screen appears.

Pressing the [MENU] button on the live screen or the freeze screen allows you to make the following settings.

Main menu	Sub menu	Item
<TITLE>	-	**Inputs a title.** Puts a title on the live screen and recorded images. Up to 30 characters can be input. See "Inputting a title" (page 111)
<WHITE BALANCE>	-	**Adjusts the white balance (Live screen only).** Specifies whether to adjust the white balance or not. • <CANCEL>: Do not adjust • <EXECUTE>: Adjust When replacing the parts like the optical adapter, adjust the white balance by acquiring an image of a white object such as a piece of paper, from a distance of 50 to 60 mm. This option cannot be used for the freeze screen.
<IMAGE MODE>	<IMAGE INVERSION>	**Inverts the live image.** You can invert the live image displayed on the LCD monitor. The available options are <OFF>, <HORIZONTALLY REVERSE>, <VERTICALLY REVERSE> and <ROTATE>. This option cannot be used for the freeze screen.
	<SHARPNESS>	**Adjusts the sharpness of the image** The sharpness level increases from left to right (4 levels). See "Adjusting the image sharpness" (page 114). This option cannot be used for the freeze screen.
	<SATURATION>	**Adjusts the color of the image** • <MONOTONE>: Displays the image in monochrome. • <NATURAL>: Displays the standard observed image. • <VIVID>: Emphasizes the entire image. See "Adjusting the image color" (page 114). This option cannot be used for the freeze screen.
	<DYNAMIC	**Makes the settings for the dynamic noise reduction.**

Main menu	Sub menu	Item
	NOISE REDUCTION>	You can specify whether to enable or disable the dynamic noise reduction. • <OFF> : Disable • <ON> : Enable This option cannot be used for the freeze screen.
	<IMAGE ORIENTATION>	**Rotates the live image in gravity direction.** You can select < OFF>, <AUTO-ORIENTATE>, or <ZOOM-ORIENTATE>. See "Rotating the live images automatically" (page 97). This option cannot be used for the freeze screen. This option cannot be used when the side-view optical adapter is used.
	<DISTORTION CORRECTION MODE>	**Corrects the distortion of the image.** You can specify the method to correct the distortion of the image so that it looks like a flat surface. 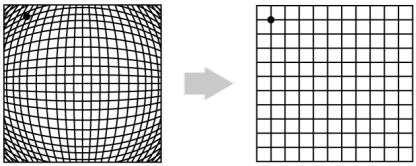 When using the optical adapter 220D: • <OFF> : Disable • <DEWARP220>: Corrects the distortion shrinked outward. (Correction range: 220-degree field of view) • <DEWARP180>: Corrects the distortion shrinked outward. (Correction range: 180-degree field of view) • <DEWARP120>: Corrects the distortion shrinked outward. (Correction range: 120-degree field of view) When using the optical adapter other than 220D: • <OFF> : Disable • <DEWARP120>: Corrects the distortion of the entire

Main menu	Sub menu	Item
		image. • <SIDE STRETCH LOW>: Softly corrects the distortion shrinked outward. • <SIDE STRETCH HIGH>: Strongly corrects the distortion shrinked outward. This option cannot be used for the freeze screen. This option cannot be used if any optical adapter is not selected.
	<GRID>	**Displays the grid on the screen.** You can select the grid view from OFF or three grid types. The grid is displayed on the live screen.
<RECORD MODE>	<FILE NAME MARK>	**Automatically adds a file mark to the end of the file name of the recorded image.** • <OFF>: The mark is not added. • <ON>: The mark is added. You can select the mark to be added when recording the image. The marks can be selected from None, _A, _B, _C and _D.
	<SD FORMAT>	**Formats (initializes) the SDHC card.** • <CANCEL>: Does not format the SDHC card. • <EXECUTE>: Formats the SDHC card. **⚠CAUTION:** Never remove the SDHC card while formatting the SDHC. **TIP:** Formatting the SDHC card deletes all data.
	<microSD FORMAT>	**Formats (initializes) the microSDHC card.** • <CANCEL>: Does not format the microSDHC card. • <EXECUTE>: Formats the microSDHC card. **⚠CAUTION:** Never remove the microSDHC card while formatting the microSDHC card.

Main menu	Sub menu	Item
		TIP: Formatting the microSDHC card deletes all data.
	<MOVIE FRAME RATE>	**Select the frame rate for movie recording.** • <30 Frames/Sec> • <60 Frames/Sec>
	<STILL AUDIO>	**Makes settings for sound recording.** You can specify whether to record the sound while recording the still image or the movie. A headset is required for recording the sound. • <OFF>: Disable • <ON>: Enable **⚠CAUTION:** Even though <STILL AUDIO> is set to <ON>, the sound will not be recorded if a headset is not connected.
	<CONSTANT VIDEO>	**Make settings for constant video recording.** You can specify whether to record the constant video or not while the live screen is displayed. • <OFF>: Disable • <ON>: Enable
<SYSTEM SETUP>	<DISPLAY>	**Selects the information to be displayed on the screen.** You can select whether to display the zoom, brightness, date/time, title, logo, optical adapter, insertion length and gravity direction.
	<DATE TIME>	**Specifies date and time.** You can specify date and time.
	<LANGUAGE>	**Specifies the display language.** You can select the language used for menus and messages. English and other languages are supported. The default setting is English. See "LANGUAGE" (page 115).
	<VERSION>	**Displays the version information.**

Main menu	Sub menu	Item
	Ver.	You can display the software version of the base unit, initial data version and the upgrade information of the system.
	<START UP>	**Saves the settings when the power was turned OFF.** By saving the settings when the power was turned OFF, you can specify whether to automatically apply such settings or not when the power is turned ON next time. • <OFF>: Disable. (Applies the default settings when the power is turned ON next time.) • <ON>: Saves the settings when the power was turned OFF, and applies such settings when the power is turned ON next time. (Settings that can be saved: Brightness adjustment, zoom factor, gain mode, and high beam or normal beam (eco))
	<LCD BACKLIGHT>	**Specifies the brightness of the back light of the LCD monitor.** The brightness level increases from bottom to top (5 levels).
	<ANGLE SPEED>	**Specifies the angulation speed.** The angulation speed can be selected between <SLOW> and <FAST> (2 levels).
	<LENGTH UNIT>	**Selects the unit of insertion length.** You can select <meter> or <foot/inch>.
	<LENGTH FORM>	**Selects the method to display the insertion length.** You can select <SECTION LENGTH> or<COMBINED LENGTH>. See "Displaying the insertion length" (page 98).
	<CLEAR DRAIN ERROR>	**Clears the drain error of the compressor.** This option cannot be used if there is no drain error when you turn ON the power of this instrument or after the drain error is cleared. See "Removing water from the drain" (page 132).
	<REMOTE CONTROLLER VIBRATION>	**Sets the vibration of the remote control unit.** You can set whether to vibrate the remote control unit or not in

Main menu	Sub menu	Item
		the following cases. ○ When the insertion tube is pulled out from the inspection object keeping the distal end of the insertion tube bent. (When <SCOPE PROTECTION> is set to <ON>.) **TIP:** When the drum unit is rotated in the winding direction, the remote control unit vibrates. ○ When an error occurs. ○ When the rotation of the live image according to the gravity direction becomes disabled during angulation operation. ○ When the remote control unit is connected. ○ When the power of the base unit is turned OFF using the remote control unit. This option cannot be used when the remote control unit is not connected.
	<SCOPE PROTECTION>	**Displays the error message when the insertion tube is pulled out from the inspection object keeping the distal end of the insertion tube bent.** You can set whether to display the message and to vibrate the remote control unit when the insertion tube is pulled out from the inspection object keeping the distal end of the insertion tube bent. **TIP:** When the drum unit is rotated in the winding direction, the error message appears. See "Detecting when pulling out the bent angulation section" (page 102).
<WIRELESS MODE>	<CONNECT>	**Specifies the wireless communication.** • <OFF>: Disable • <ON>: Enable
	<DEFAULT>	**Initializes the wireless settings.** • <CANCEL>: Does not format the wireless settings.

Main menu	Sub menu	Item
		• <EXECUTE>: Formats the wireless settings.
<PLAY CONSTANT VIDEO>	-	**Plays back the constant video.** Plays back the constant videos automatically if there are recorded constant videos.
<SELECT OPTICAL ADAPTER>	-	**Displays the optical adapter list.** You can set the optical adapter that is connected to the system. This option cannot be used for the freeze screen.
<ROTATE>	-	**Displays the screen by rotating it 180 degrees.** You can display the screen of the LCD monitor by rotating it 180 degrees. To return to the original state, select <OFF> in the <ROTATE> menu.

5.2.2 Inputting a title

There are two methods to input a title as shown below.

- Use the software keyboard.
- Select a preset title.

Inputting a title using the software keyboard

1. Select the input mode.

Select </*@> or <ÀÁÂ>.

2. Select the text buttons you want.

To delete texts

- To delete a single text, move the cursor to it and select <DELETE>.
- To delete all input texts, select <CLEAR>.

To input a space

Move the cursor to the location where you want to input the space, and select <SPACE>.

3. Select <EXECUTE>.

The title you input is displayed on the live screen and the freeze screen.

Inputting a title by selecting a preset title

With this procedure, you can input a title by selecting a preset text string.

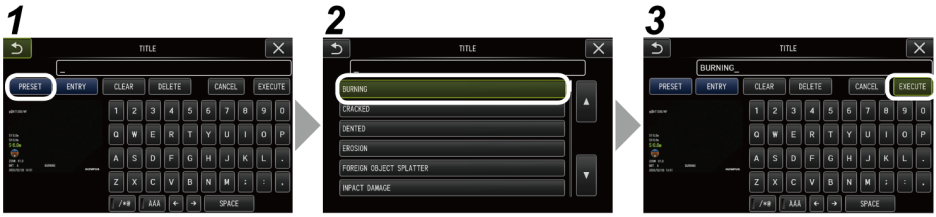

1. Select <PRESET>.

A list of preset titles is displayed. To cancel selecting the preset title, press the close button (x) to close the screen.

2. Select the text strings from the preset title list.

The text string you selected appears in the title field and the list is closed.

Repeat steps ***1*** and ***2*** to complete inputting the title.

TIP:

The preset title list has nine pages. To change pages, select the text string in line 1 or line 6 of the list and operate the [MEAS/ENTER] joystick upward or downward, or press the up button or the down button on the right side of the screen.

3. Select <EXECUTE>.

The title you selected is displayed on the live screen and the freeze screen.

5.2.3 Registering a text string as a preset title

Registering the frequently used text strings as preset titles in advance allows you to recall them when you input the titles. You can register a maximum of 54 text strings for preset titles.

1. Input the text string you want to register in the title field.

For details of inputting procedures, see "Inputting a title" (page 111).

2. Select <ENTRY>.

The text strings registered as preset titles are listed.

To cancel registering the preset titles, press the close button (x) to close the screen.

TIP:

The preset title list has nine pages. To change pages, select the text string in line 1 or line 6 of the list and operate the [MEAS/ENTER] joystick upward or downward, or press the up button or the down button on the right side of the screen.

3. **Select the line for registering the text string.**

The text string you input in the title field is registered as the preset title. Registering a preset title overwrites anything currently in the line you specify in the list. You can, therefore, delete a preset title by registering the title input field keeping it blank.

The preset title list screen is closed.

5.2.4 Adjusting the image sharpness

You can emphasize the frame sharpness of the image.

<IMAGE MODE> - <SHARPNESS>

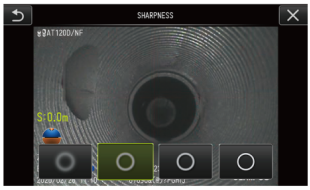

Pressing the button will change the frame sharpness level.

If you obtain the suitable sharpness, press the close button (x).

5.2.5 Adjusting the image color

You can display the image by adjusting its color.

<IMAGE MODE> - <SATURATION>

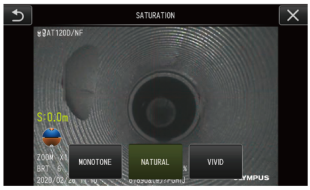

Pressing the button will change the saturation level.

If you obtain the suitable saturation, press the close button (x).

5.2.6 DATE and TIME

Use the procedure below to specify date and time.

<SYSTEM SETUP> - <DATE TIME> - D.M.Y, H:M, DATE FORMAT SETUP

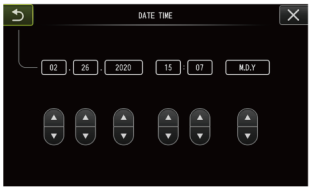

Be sure to set the correct date and time before use if you use the instrument for the first time.

The date and time information is recorded together with the screen information on the still image and the movie.

5.2.7 LANGUAGE

Use the procedure below to select the language for menus and error messages that appear on the display.

<SYSTEM SETUP> - <LANGUAGE>

TIP:

The default setting is English. Change to your desired language if necessary.

5.3 Using the thumbnail screen or the view screen

5.3.1 File/folder operation menu

You can make the following settings in the menu displayed on the thumbnail screen.

Menu	Available settings
<DELETE>	**Deletes the recorded image.** • <CANCEL>: Do not delete the image. • <EXECUTE>: Delete the image.

Menu	Available settings
	You can delete the images selected on the thumbnail screen or images with the mark (✓).
<MOVE FILE>	**Moves image files from one folder to another.** You can move the recorded images to a different folder. The images currently selected on the thumbnail screen or images with the mark (✓) are moved.
<RENAME FILE>	**Changes the image file name.** You can change the name of the recorded image file (30 characters or less).
<CHANGE FOLDER>	**Switches between the folder for recording and the folder playing back the image.** You can switch between the folder for recording and the folder for playing back the image. The default setting is “DCIM\100IPLEX”. You can change to the folder displayed on the menu screen. For procedures to change to the folder which is not displayed on the menu screen, see "Switching the folder on the live screen" (page 83).
<MAKE FOLDER>	**Creates a new folder for recording and playing back the image.** You can create a folder for recording and playing back the image. Up to 1,000 folders can be created in one folder.
<RENAME FOLDER>	**Renames a folder for recording and playing back the image.** You can rename a folder for recording and playing back the image.

TIP:

You can use only alphanumeric characters and symbols for folder and file names. Some symbols cannot be used for the folder and file names.

The following settings can be made on the view screen menu.

Menu	Available settings
<DELETE>	**Deletes the recorded image.** • <CANCEL>: Do not delete the image.

Menu	Available settings
	• <EXECUTE>: Delete the image. You can delete the image displayed on the view screen.
<NOTE> 	**Inputs the note information (text/mark/free drawing) to the desired position on the screen (view screen for still image only).** You can input the note information (text/mark/free drawing) on the still image that is being played back.

6. Measurement functions

6.1 Scaler measurement function

6.1.1 Scaler measurement

Scaler measurement measures the length of an object using the reference length value that is preset according to a known length inside the observation image.

NOTE:

Therefore, if the reference length is incorrect, the correct measurement accuracy cannot be obtained. Note that the measurement is made based on the assumption that the reference object and the object to be measured are on the same plane vertical to the optical axis.

6.1.2 Scaler measurement screen

Explanation of the scaler measurement screen

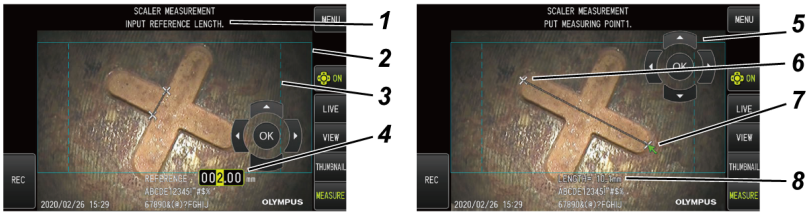

No.	Name	Function
1	Message box	Displays information related to operation.
2	Measurable region	Displays the measurable region with solid line.
3	Recommended measurement region	Displays the recommended measurement region with dotted line.
4	Reference length	Inputs the dimensions of the parts of which length is known.
5	[CURSOR/OK] button	Operates the cursor and inputs the reference length on the screen.
6	Point	Reference point or measuring point that has been input
7	Cursor	Specifies the reference point or measuring point.
8	Measurement value	Displays the measurement result of the input points.

TIP:

- Tapping the [CURSOR/OK ON] button (ON) each time changes the [CURSOR/OK] button repetitively in the order of show, move and hide.
- The recommended measurement region is displayed with dotted line when the optical adapter 220D is used.
  - When <OFF> is set on the <DISTORTION CORRECTION MODE> menu, the recommended circular measurement region is displayed.
  - When <DEWARP220> or <DEWARP180> is set on the <DISTORTION CORRECTION MODE> menu, the recommended rectangular measurement region is displayed.

List of messages displayed in the message box

<PUT REFERENCE POINT1.>
<PUT REFERENCE POINT2.>
<INPUT REFERENCE LENGTH.>
<PUT MEASURING POINT1.>
<PUT MEASURING POINT2.>

Scaler measurement menu and functions

Menu	Description
<CLEAR>	Clears the measuring point or reference point that is specified last
<REFERENCE>	Sets a new reference length again.
<MEASURE>	Starts the scaler measurement (specify measuring points) using the reference length.
<UNIT>	Selects the unit for the measurement

Menu	Description
	You can select <mm> or <inch>.
<CURSOR>	Selects a cursor shape. You can select or .
<EXIT MEASUREMENT>	Exits the scaler measurement.

6.1.3 Using scaler measurement

1. Start up

Press the [MEAS/ENTER] joystick while the image to be measured is displayed.

2. Specify the reference points

Align the cursor with one end of the object which is displayed in the image and of which length is known, and press the [MEAS/ENTER] joystick, and then align the cursor with the other end and press the [MEAS/ENTER] joystick.

3. Set the reference length

Operate the [MEAS/ENTER] joystick up/down/left/right, and input the known length (reference length). Press the [MEAS/ENTER] joystick to confirm the input.

4. Specify the measuring points

Align the cursor with one end of the object you want to measure and press the [MEAS/ENTER] joystick, and then align the cursor with the other end and press the [MEAS/ENTER] joystick.

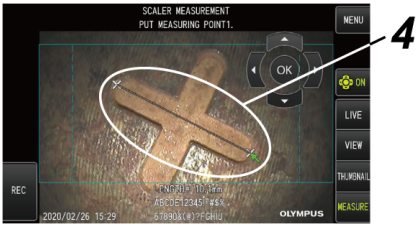

5. Exit measurement

Select Menu -> <EXIT MEASUREMENT> -> <EXECUTE>.

7. Remote operation

This instrument can be operated away from the base unit using the repeater (transmitter) and the repeater (receiver) (recommended products).

For the recommended repeater (transmitter) and repeater (receiver), contact us.

7.1 Configuration example 1

Connecting units as follows allows you to operate this instrument remotely using the remote control unit while looking at the external monitor.

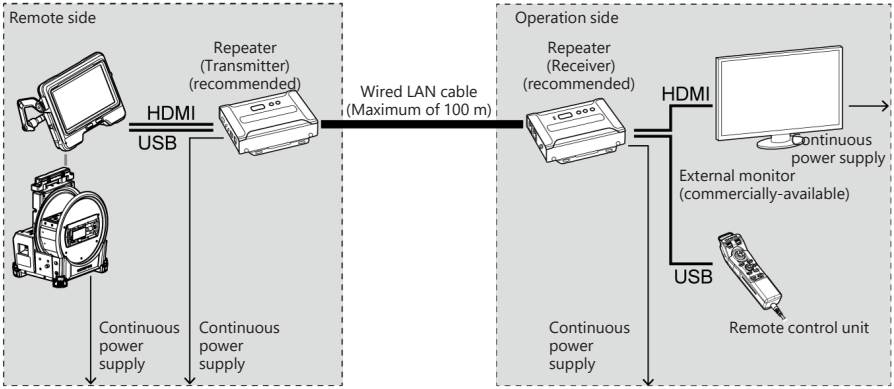

7.2 Configuration example 2

Connecting units as follows allows you to control the power of the drum unit in addition to the remote operation shown in Configuration example 1. (Special settings are required for this configuration. Contact us for details.)

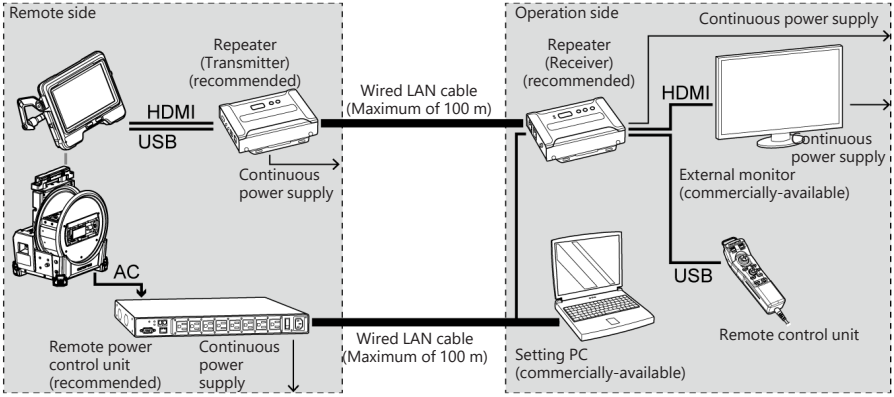

8. Troubleshooting

Inspect the instrument as described in "Pre-operation preparation and inspection" (page 38). If there are any obvious malfunctions, do not use the instrument and contact us for repairs. If a slightest irregularity is suspected, do not use the instrument and take the actions described in "Troubleshooting guide" (page 123). If the problem cannot be resolved by taking the remedial action described, stop using the instrument and contact us for repair.

8.1 Troubleshooting guide

8.1.1 Error messages

Message	Cause and recommended action
<SD MEDIA / NOT ENOUGH MEMORY.>	The SDHC card is full. →Delete the unnecessary data to free up space, or replace with a new SDHC card. **TIP:** The internal memory can store up to approximately 20 still images. For details, see "Still images can be recorded in the internal memory." (page 87).
<microSD MEDIA / NOT ENOUGH MEMORY.>	The microSDHC card is full. →Delete the unnecessary data to free up space, or replace with a new microSDHC card.
<INTERNAL NOT ENOUGH MEMORY.>	The internal memory is full. →Insert the SDHC card and copy the image data in the internal memory to the SDHC card. (When copying is complete, images in the internal memory will be deleted.)
<NO SD MEDIA.>	The SDHC card is not inserted. →Load the SDHC card you use and try again. Or turn OFF the instrument and ON again.
<No microSD MEDIA.>	The microSDHC card is not inserted. →Load the microSDHC card you use and try again. Or turn OFF the instrument and ON again.
<SD MEDIA ERROR. PLEASE FORMAT THE SD MEDIA.>	The format of the SDHC card cannot be recognized. →Format the SDHC card with this instrument.
<microSD MEDIA ERROR. PLEASE FORMAT THE microSD MEDIA.>	The format of the microSDHC card cannot be recognized. →Format the microSDHC card with this instrument.
<SD MEDIA IS LOCKED. PLEASE UNLOCK.>	The SDHC card is locked. →Unlock the SDHC card you will use and insert the SDHC card in this instrument.
<THIS IMAGE CANNOT BE VIEWED.>	The image is not recorded with this instrument.

Message	Cause and recommended action
	→Only images recorded with this instrument can be displayed.
<THE SPECIFIED FILE NAME ALREADY EXISTS. PLEASE CHOOSE ANOTHER NAME.>	The file name already exists. →Specify the file name other than the existing file name.
<THE SPECIFIED FOLDER NAME ALREADY EXISTS. PLEASE CHOOSE ANOTHER NAME.>	The folder name already exists. →Specify the folder name other than the existing folder name.
<SAVE FILE ERROR.>	While recording the movie or the sound, it cannot be recorded on the SDHC card for some reason. →Record the movie or the sound again. Or use the SDHC card recommended by us.
<MEASUREMENT IS NOT AVAILABLE ON ZOOMED IMAGE.>	The scaler measurement started while displaying the image of which zoom factor is not 1.0X. →Change the zoom factor to 1.0X, and start the scaler measurement.
	The scaler measurement started from the live image when <ZOOM-ORIENTATE> is set in the <IMAGE ORIENTATION> menu. →Set the <IMAGE ORIENTATION> menu to <OFF> or <AUTO-ORIENTATE>, and start the scaler measurement.
<AUDIO CANNOT PLAY.>	The sound file is damaged. →Record the image with sound again.
<WATER ACCUMULATED (COMPRESSOR UNIT). PLEASE TURN OFF THE POWER AND DRAIN WATER.>	The cumulative driving time of the compressor in the drum unit passes the specified time. →Turn OFF the power of the system and drain water from the compressor. Turn ON the power again and select <EXECUTE> from the <CLEAR DRAIN ERROR> menu. (See "Removing water from the drain" (page 132)).
<TURNED OFF THE WIRELESS LAN.>	The self-check function was activated to turn OFF the wireless LAN because the internal temperature became too high. →Stop inspection temporarily, turn OFF the power of the system to allow this instrument to cool down, and turn ON the power again.
<HIGH TEMPERATURE (MAIN UNIT). PLEASE TURN OFF THE POWER.>	The self-check function was activated to prompt termination of the inspection because the internal temperature became too high. →Stop inspection temporarily, turn OFF the power of the

Message	Cause and recommended action
	system to allow this instrument to cool down, and turn ON the power again.
<PLEASE CENTER THE DISTAL END BY PRESSING THE CENTER BUTTON.>	The distal end of the insertion tube may be caught by something. →Center the distal end of the insertion tube. If pulling out the distal end of the insertion tube while it is bent does not cause any problem, close the message and continue inspection.
<HIGH TEMPERATURE (DISTAL END). PLEASE IMMEDIATELY PULL OUT THE INSERTION TUBE.>.	The self-check function was activated to prompt termination of inspection because the distal end became too hot. →Immediately pull out the insertion tube from the inspection object. **TIP:** This message will appear before the atmospheric temperature of the distal end reaches the maximum operating ambient temperature.
<OVER CURRENT (LIGHT SOURCE). PLEASE TURN OFF THE POWER.>	The self-check function was activated to prompt termination of inspection due to the over-current of the optical adapter. →Stop the inspection temporarily, turn OFF the power of the system and attach the optical adapter correctly (See "Attaching and removing the optical adapter" (page 54)), and turn ON the power again.
<LOW BATTERY. PLEASE CONNECT TO THE AC ADAPTER OR TURN OFF THE POWER.>	The battery voltage and/or the external battery voltage is low. →Stop all operations, such as image recording, copying, deleting and formating the SDHC card, etc., and immediately replace the battery and/or the external battery. Or connect the AC adapter. **TIP:** When the battery and the external battery are connected to this instrument, this message will appear if the voltages of both batteries are low.
<BATTERY TEMPERATURE IS HIGH. PLEASE TURN OFF THE POWER.>	The self-check function was activated to prompt termination of inspection because the battery and/or the external battery became too hot. →Stop inspection temporarily, turn OFF the power of the

Message	Cause and recommended action
	system to allow this instrument to cool down, and turn ON the power again.
<OVER CURRENT (COMPRESSOR MOTOR). PLEASE TURN OFF THE POWER.>	The self-check function was activated to prompt termination of inspection due to the abnormal motor of the compressor unit in the drum unit. →Stop inspection temporarily, turn OFF the power of the system to allow this instrument to cool down, and turn ON the power again.
<ABNORMAL PRESSURE (COMPRESSOR UNIT). PLEASE TURN OFF THE POWER.>	The self-check function was activated to prompt termination of inspection due to the abnormal pressure of the compressor unit in the drum unit. →Stop inspection temporarily, turn OFF the power of the system to allow this instrument to cool down, and turn ON the power again.
<HIGH TEMPERATURE (COMPRESSOR UNIT). PLEASE TURN OFF THE POWER.>	The self-check function was activated to prompt termination of inspection because the inside of the compressor unit in the drum unit became too hot. →Stop inspection temporarily, turn OFF the power of the system to allow this instrument to cool down, and turn ON the power again.
<IMAGER ERROR. PLEASE TURN OFF THE POWER.>	The self-check function was activated to prompt termination of inspection due to abnormal image acquisition function. →Stop inspection temporarily, turn OFF the power of the system, and turn ON the power again.
<UNRECOGNIZED SCOPE UNIT IS SET. PLEASE TURN OFF THE POWER.>	The power is turned ON when the scope unit other than the scope unit for this instrument is connected to the drum unit. →Connect the scope unit designated for this instrument.

8.1.2 Common problems

Problem	Cause and recommended action
Illumination does not light.	The [LIGHT] button is not turned ON. →Turn ON the button.
	The optical adapter is not attached. →Attach the optical adapter. (See "Attaching and removing the optical adapter" (page 54).)
The optical adapter cannot be attached to the insertion tube.	A foreign object is stuck to the screws.

Problem	Cause and recommended action
	→Wipe with a clean piece of gauze or a cotton swab.
	The optical adapter in use is not a designated optical adapter for this system. →Use the designated optical adapter.
	The optical adapter is not attached properly. →Attach the optical adapter again according to the correct procedures. (See "Attaching and removing the optical adapter" (page 54).)
The optical adapter cannot be removed from the insertion tube.	The optical adapter is not attached properly. →Attach and remove the optical adapter properly again. (See "Attaching and removing the optical adapter" (page 54).)
The system cannot be turned ON.	The AC adapter, the battery and/or the external battery is not connected. →Connect the AC adapter, the battery and/or the external battery correctly. (See "Preparing the power supply" (page 49).)
	The main switch of the drum unit is not turned ON. → Turn ON the main switch of the drum unit.
	The power of the base unit is not turned ON. →Press the [POWER] button (⏻) of the base unit for 2 seconds to turn ON the power.
	A non-designated AC adapter, battery or external battery is connected. →Use the designated AC adapter, battery or external battery.
	The scope unit is not attached to the drum unit properly. →Attach the scope unit to the drum unit properly.
	The relay cable is not connected correctly. → Connect the relay cable correctly.
	The fuse of the external battery case is blown. →Replace the fuse.
The system cannot be turned OFF.	The base unit is damaged. →Remove the AC adapter or the battery from the drum unit and turn OFF the power. →Remove the external battery from the external battery case, and turn OFF the power.
	The main switch of the drum unit is not turned OFF. →Turn OFF the main switch of the drum unit.
The image is not sharp.	The objective lens of the distal end of the insertion tube or the optical adapter is dirty.

Problem	Cause and recommended action
	→Wipe with a clean piece of gauze or a cotton swab.
	The optical adapter is not attached correctly. →Attach the optical adapter properly (See ("Attaching and removing the optical adapter" (page 54).)
	The image sharpness is not adjusted appropriately. →Adjust the image sharpness appropriately. (See "Adjusting the image sharpness" (page 114).)
	The external monitor is not adjusted appropriately. →Adjust the external monitor appropriately.
The image brightness is not optimal.	The objective lens of the distal end of the insertion tube or the optical adapter is dirty, or the illumination part on the tip of the optical adapter is dirty. →Wipe with a clean piece of gauze or a cotton swab.
	The automatic brightness control is not set appropriately. →Use the [BRIGHT] lever to adjust it to the appropriate setting.
	The external monitor is not adjusted appropriately. →Adjust the external monitor appropriately.
	The optical adapter is loose. →Attach the optical adapter properly (See ("Attaching and removing the optical adapter" (page 54).)
The live image looks unnatural.	The white balance is not set properly. →Adjust the white balance again.
	The image color is not adjusted appropriately. →Adjust the image color appropriately. (See "Adjusting the image color" (page 114).)
The noise is noticeable on the image.	The automatic brightness control is not set appropriately. →Use the [BRIGHT] lever to adjust it to the appropriate setting.
	The dynamic noise reduction is not set to ON. → On the <IMAGE MODE> menu, set <DYNAMIC NOISE REDUCTION> to <ON>.
The screen is not displayed. (The screen is not displayed properly.)	→Turn OFF the power of the system, and turn ON the power again.
	The scope unit is not attached to the drum unit properly. →Attach the scope unit to the drum unit properly.
This instrument cannot be operated with the remote control unit.	The remote control unit is not attached properly. →Remove the remote control unit from the base unit and attach it again properly.

Problem	Cause and recommended action
The noise appears on the external monitor or the image is interrupted.	The instrument is affected by ambient electromagnetic wave or static electricity. →Disconnect the HDMI cable from the external monitor and connect it again.

8.2 Requesting repair of this product

Contact us when you request repair of this instrument.

Include a detailed description of the malfunction and the conditions under which it occurs when returning the instrument.

Malfunctions that occur during the warranty period are repaired at no charge according to the warranty agreement. Be sure to attach the warranty agreement when returning the instrument for repairs. The repair will be charged if the warranty agreement is not attached. The freight fees are paid by the user even if repairs are done free of charge.

We will not repair an instrument contaminated by noxious substances.

9. Storage and maintenance

9.1 Replacing the battery or the external battery

Though the battery life and the external battery life depend on the operating environment and frequency of use, replacement of the battery or the external battery is recommended whenever the battery operation time or the external battery operation time becomes very short.

Contact us about changing the battery.

For detail procedures to load and remove the battery, see "Using the battery" (page 49).

For detail procedures to load and remove the external battery, see "Using the external battery" (page 50).

9.2 Replacing the O-ring

Replace the O-ring with the spare one periodically.

Attach the O-ring to the correct position by referring to "Distal end / Optical adapter nomenclature" (page 27), "Attaching the scope unit" (page 41) and "Attaching and removing the optical adapter" (page 54).

The optical adapter comes with 6 spare O-rings and the scope unit comes with 12 spare O-rings.

9.3 Cleaning components

9.3.1 Cleaning the insertion tube

Dirt or other foreign objects on the insertion tube:

Wipe with a clean soft cloth.

Dirty water, machine oil or other liquid on the insertion tube:

Do not use a hard cloth or hard brush, but wipe it with a soft cloth or cotton swab, and then wash thoroughly with a piece of gauze or other material moistened with a neutral detergent. Then, use a clean, soft piece of soft gauze moistened with clean water, and wipe the insertion tube to dry all moisture.

NOTE:

Clean the insertion tube immediately after pulling out the insertion tube. Leaving the insertion tube very dirty for a long period can cause it to become corroded.

9.3.2 Cleaning the distal end

Dirt or water droplets on the objective lens of the distal end

Grasping the rigid portion of the distal end, use a clean, soft piece of gauze or a cotton swab to wipe off the dirt or water droplets.

You could also use the brush to brush away dirt and water droplets.

Best results may be obtained by using a commercially available absolute ethanol or isopropyl alcohol.

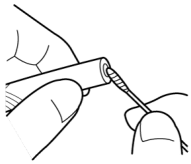

Cotton swab

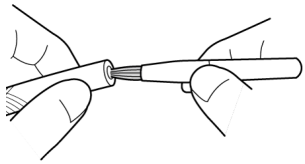

Brush

Dirt on the optical adapter positioning groove or screw threads of the distal end

Use the brush provided with the cleaning kit to brush away built up dirt.

Note that insufficient cleaning may result in a loss of water tightness between the optical adapter and the distal end.

9.3.3 Cleaning the optical adapter

Dirt or water droplets on the outer surface of the optical adapter

- Use a piece of clean, soft gauze or cotton swab to wipe off dirt and water.
- Use the brush to brush away dirt accumulated in the groove.
- Press a piece of soft gauze or paper that is soaked with an abundant amount of commercially available dehydrated ethanol or isopropyl alcohol against the front of the optical adapter.
- Press a dry piece of soft gauze of paper against it to absorb the dehydrated ethanol or isopropyl alcohol.

Dirt or water droplets on the inner surface of the optical adapter

Perform cleaning following the steps from (1)→(2)→(3) until no dirt is attached to the cotton bud. Use the brush to brush away dirt accumulated in the groove.

Also, for thorough cleaning, turn the optical adapter while doing (2) and (3).

Best results can be obtained using commercially available absolute ethanol or isopropyl alcohol.

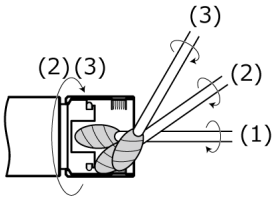

NOTE:

Do not clean the optical adapter under running water. Otherwise, the optical adapter may be damaged.

9.3.4 Cleaning the LCD monitor

LCD monitor viewing problems due to fingerprints and dirt

Wipe the LCD monitor with a soft cloth moistened with clean water. Then, lightly wipe it with a clean and dry cloth.

NOTE:

- Never use a chemically treated cloth or strong detergent, such as benzine or alcohol. Otherwise, the surface of the LCD monitor may be damaged.
- Do not use a cloth that is hard, dirty, or has foreign substance on it. Otherwise, the surface of the LCD monitor may be damaged.

9.3.5 Cleaning the centering device or the guide head

Dirt, oil or other foreign objects on the guide head or the centering device:

Wash thoroughly with cleaning solution such as neutral detergent, etc., and rinse it under running water. Then, lightly wipe it with a clean and dry cloth.

In particular, make sure that no foreign objects remain on the screws.

9.3.6 Cleaning other units

If the units other than insertion tube, distal end, optical adapter or LCD monitor are dirty, wipe them with a soft cloth moistened with clean water. Then, lightly wipe them with a clean and dry cloth. Wipe away any dirt or water droplets on the inner face of the battery door, interface door, SD card door and relay cable doors, as well as the mounting parts of each unit.

9.4 Removing water from the drain

If the following message appears, remove water from the drain of the drum unit.

- <WATER ACCUMULATED (COMPRESSOR UNIT). PLEASE TURN OFF THE POWER AND DRAIN WATER.>

NOTE:

Remove water from the drain after the air is exhausted from the compressor sufficiently. Otherwise, water may be scattered.

Turn OFF the power of the system and wait until the air is exhausted.

1. Press <OK> to close the message and turn OFF the power of the system.

2. Place the dry cloth under the drain.

3. Loosen the screw of the drain by rotating it in the arrow direction, and remove water from the drain.

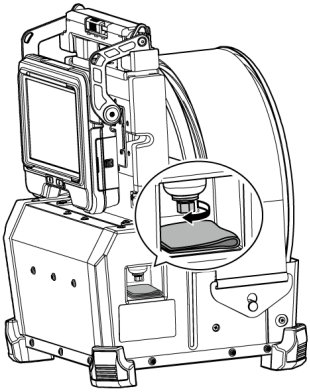

4. When no water comes out, tighten the screw of the drain by rotating it in the opposite direction of the arrow direction, and close the drain.

5. Remove the cloth. If water adheres to the drum unit, wipe it off.

6. Turn ON the power of the system.

The following message appears again.

- <WATER ACCUMULATED (COMPRESSOR UNIT). PLEASE TURN OFF THE POWER AND DRAIN WATER.>

7. Press <OK> to close the message, and select the menu - <SYSTEM SETUP> - <CLEAR DRAIN ERROR> and <EXECUTE>.

9.5 Replacing the fuse

⚠CAUTION:

- To prevent the electric shock, turn OFF the power of the product, remove the external battery case from the drum unit, remove the external battery from the case, and then replace the fuse.
- Be sure to use the specified fuse. Using a fuse other than the specified one may cause fire.

1. **Open the latch of the external battery case and remove the external batteries (8 units) from the case.**

2. **Rotate the fuse holder counterclockwise and remove it from the case.**

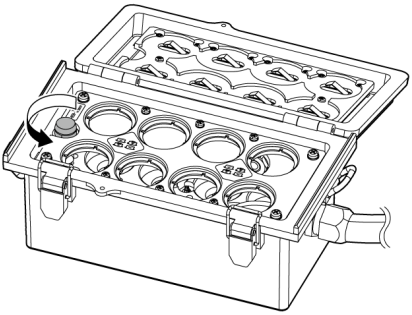

3. **Replace the one fuse with a new one.**

Fuse model number: Littelfuse 0215005.MXP
Fuse rating: T 5A H 250V
Fuse size: 5×20 mm
Number of fuses required: One

If the fuse is blown out, obtain the product with the model number described above and replace with the old one. If it is difficult to obtain the product with the model number described above, use the product that complies with IEC 60127-2 Standard Sheet 5 and also meets the rating and size described above.

4. **Rotate the fuse holder clockwise and set it to the original position.**

9.6 Storing in the case

9.6.1 Storing in the carrying case

1. Turn OFF the power, and remove the battery, AC adapter and remote control unit.

2. Wrap the insertion tube around the drum of the drum unit, and cover it with the lock belt.

NOTE:

- Make sure that the distal end of the insertion tube is covered with the lock belt.
- When storing the drum unit after removing the scope unit (from the drum unit), rotate the drum rotator to make the connection part with the scope unit face down and secure the drum rotator with the lock belt in order to prevent the entry of dust.

3. Attach the base unit to the drum unit as shown in the picture below.

Bundle the relay cable keeping it connected to the drum unit and the base unit.

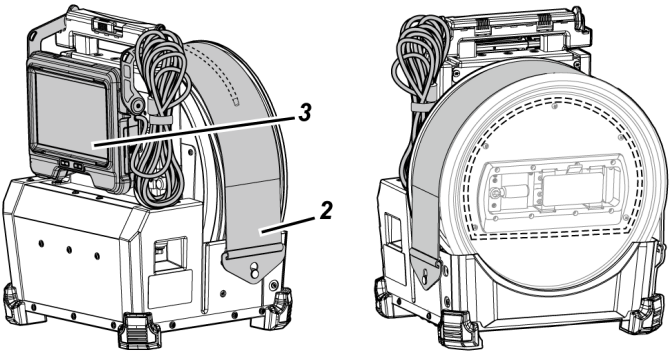

4. **Hold the handle of the drum unit, and store the drum unit and the base unit in the carrying case by paying attention to the orientation.**

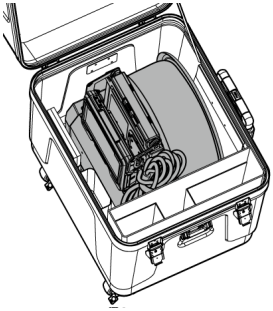

5. **Store the following units in the carrying case.**

- Instruction manual ***(A)***
- External battery case ***(B)***
- 5 m relay cable, battery charger, AC adapter, AC power cord and HDMI cable ***(C)***

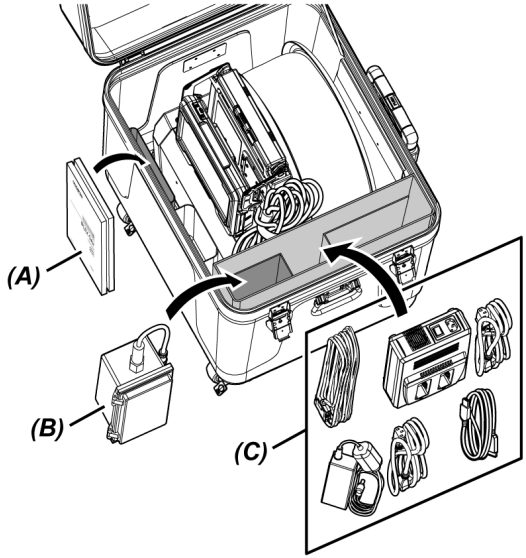

6. Store the following units in the top cover.

- Optical adapter case ***(D)****
- Remote control unit ***(E)***
- Guide head ***(F)***
- Push rod adapter ***(G)***
- Pole unit (pole, camera platform) ***(H)***
- Battery ***(I)***

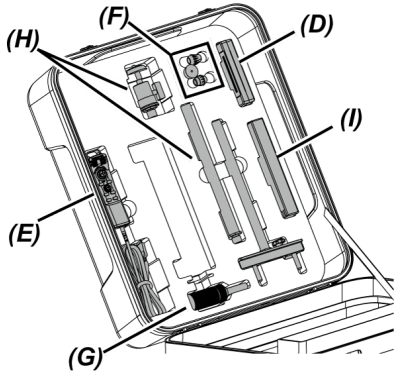

* The optical adapter case can be stored either in the carrying case or the drum unit.

NOTE:

- Do not close the cover of the case if the insertion tube is still protruding from the lock belt. Otherwise, the insertion tube may be damaged.
- Never subject cables to severe bending, pulling, binding, twisting, or crushing forces. Do not allow a cable to be exposed to heat, which can melt its covering. Otherwise, the cable may be damaged, which can cause fire and electric shock.
- Store this product under normal room temperature and humidity.
- Store the instrument on a level surface in a clean, dry and stable place.

9.6.2 Storing the scope unit in the scope case

Remove the scope unit from the drum unit, and store it in the scope case.

1. **Insert the distal end of the insertion tube into the distal end holder *(A)* (loop of the rubber band) on the spool gently until it touches the end.**

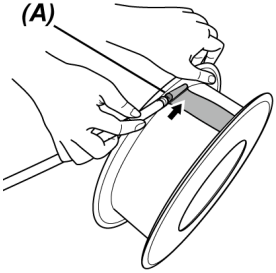

NOTE:

Do not insert the distal end of the insertion tube into the distal end holder with excess force. Otherwise, the angulation section may be damaged.

2. **Wrap the insertion tube around the spool.**

NOTE:

- Make sure that the insertion tube is not twisted before wrapping the insertion tube around the spool.
- Wrap the insertion tube around the spool evenly.

3. **Loosen the clamping screws (2 positions) *(B)* of the scope unit main body using the coin, etc., and remove the scope unit main body from the drum unit.**

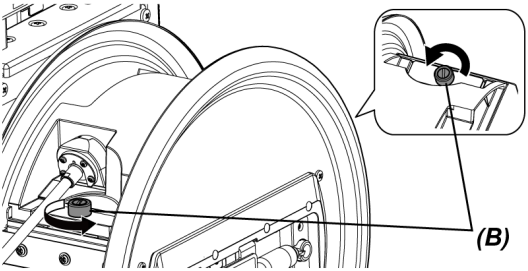

4. **Hold the scope unit main body and the spool, and store them in the scope case.**

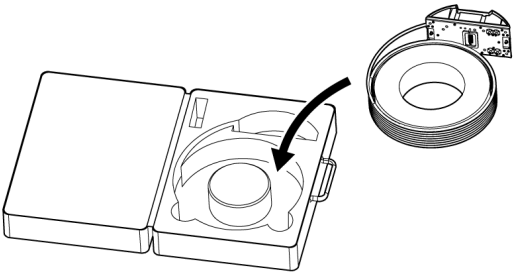

NOTE:

Do not close the cover of the case if the insertion tube is still protruding from the case. Otherwise, the insertion tube may be damaged.

10. Specifications

10.1 Operating environment

Item		Specifications
Operating temperatures		
	Insertion tube	In air: -25 to 100 °C In water: 10 to 30 °C
	Parts other than insertion tube and external battery case	In air: -15 to 48 °C (Battery-powered operation) : 0 to 40 °C (AC adapter-powered operation)
	External battery case	In air: 0 to 48 °C (Note that the temperature range may be narrower depending on the performance of the external battery.)
Operating atmospheric pressure		
	Insertion tube	In air: Normal pressure (1,013 hPa) In water: 1,013 to 4,052 hPa (up to water depth 30 m)
	Parts other than insertion tube	In air: Normal pressure (1,013 hPa)
Operating environment altitude		
	All parts	Up to altitude 2,000 m
Operating environment humidity		
	All parts	15 to 90% (relative humidity)
Liquid resistance		
	Insertion tube	No problem even if exposed to machine oil, light oil or 5% saline solution.
	Parts other than insertion tube	No problem even if the exterior part only is exposed to machine oil, light oil or 5% saline solution. (Damage due to penetration into the product is out of warranty.)
Waterproofing		
	Insertion tube	Waterproof construction. Can be used underwater with the optical adapter attached. Pressure-resistant water depth 30 m
	Parts other than insertion tube	Not dustproof, waterproof or splashproof
Pollution Degree		
	All parts	2 (Including AC adapter) (in accordance with IEC60664-1)
Installation (overvoltage) category		
	All parts	Ⅱ(in accordance with IEC60664-1)

NOTE:

- Meeting the operating environment specifications does not constitute any guarantee against damage to or malfunction of this instrument.
- Use AC adapter indoor (normal temperature).

10.2 Storage environment

Item		Specifications
Storing temperatures		
	Battery	-20 °C to 60 °C (Recommended: 20 °C)

10.3 Other specifications

10.3.1 Other specifications

Item		Specifications
Optical system		
	For optical adapter specifications, see "Optical adapter specifications" (page 147).	
	Illumination	LED illumination at distal end
Distal end		
	Outer diameter	ø8.5 mm
	Distal end rigid section length	See the specifications of the distal end rigid section length of the optical adapter.
	Angulation	90° (Note that the angulation underwater is not guaranteed.)
	Angulation operation	Pneumatic articulation with built-in air compressor
Flexible section		
	Flexibility	Tapered Flex insertion tube with flexibility gradually increasing toward the distal end
	Outer diameter	ø8.5 mm
Insertion tube		
	Scope length	IV98200GA: 20 m IV98300GA: 30 m
	Exterior	High - durability tungsten braid
Drum unit		
	Dimensions	359(W) x 465(H) x 307(D) mm
	Weight	10.0 kg (including 1.5 m relay cable)

Item		Specifications
Base unit		
	Dimensions	241(W) x 190(H) x 70(D) mm (excluding protrusion)
	Weight	1.56 kg
Scope unit		
	Dimensions	246(W) x 79(H) x 119(D) mm (excluding insertion tube and protrusion)
	Weight (including LED unit)	IV98200GA: 3.1 kg IV98300GA: 4.2 kg
Remote control unit		
	Dimensions	39(W) x 137(H) × 40(D) mm (excluding connection cables)
	Weight (Including cables and connectors)	280 g
External battery case		
	Dimensions	289(W) x 103(H) × 126(D) mm (excluding protrusion)
	Weight	1.2 kg
Guide head		
	Outer diameter	ø20 mm
	Inner diameter	120D: ø8.5 mm 220D: ø10 mm
Pole unit		
	Dimensions	Head: 61(W) x 42(D) x 81(H) mm (excluding screw thread) Pole: 253(L) x ø20(D) mm (excluding screw thread) Pole stand:132(W) x 35.2(D) x 271.5(H) mm (excluding protrusion)
	Weight	Head: 130 g Pole: 120 g Pole stand: 270 g
	Connection with base unit	1/4-20UNC camera screw
Push rod adapter		
	Outer diameter	ø32 mm
	Total length	123 mm
	Weight	320 g
Carrying case		
	Dimensions	538(W) x 622(H) x 444(D)mm (excluding protrusion)
	Weight	11.2 kg

Item		Specifications
Scope case		
	Dimensions	540(W) x 420(H) x 160(D)mm
	Weight	1.3 kg
LCD monitor		Liquid crystal panel 8 inch TFT full-color low reflective coating type Electrostatic capacitive type touch screen 5 step LCD backlight adjustment
Input/Output connector		
	USB connector	USB 2.0 compatible USB wireless LAN adapter (recommended) or remote control unit (optional) are connectable.
	Headset terminal	ø3.5 mm 4-pole plug (CTIA-compliant)
	HDMI terminal	Type A
Power supply		
	Battery	Specified battery (Lithium Ion) Model: NP-9X, NP-L7S made by IDX Nominal voltage: DC 14.4 V(NP-9X), 14.8 V(NP-L7S) Nominal capacity: 96 Wh(NP-9X), 68 Wh(NP-L7S) Battery powered operating time: Approximately 180 minutes (when using new battery)
	Battery charger	Model: JL-2PLUS made by IDX Input voltage: 100 V to 240 V AC Frequency: 50/60 Hz For details, refer to the instruction manual of your battery charger.
	AC adapter	Model: SPU61A-107-P25G001-OSC made by SINPRO Input voltage : 100 V to 240 V AC ± 10% Frequency : 50/60 Hz Output voltage: 16 V DC
	External battery	For recommended products, contact us.
Power consumption		51W (AC adapter-powered operation)
Recording media		SDHC card (for still image and movie recording) MicroSDHC card (for constant video recording) Our recommended product complied with Class10
Still image recording		
	Resolution	H640 × V480(Pixel)

Item		Specifications
	Recording format	Records in the JPEG compression format.
Still image playback		
	Restrictions	Images recorded with this instrument can be played back.
Movie recording		
	Resolution	H640 × V480(Pixel)
	Recording format	MPEG-4 AVC(H.264) formats Can be played back on the Windows Media Player. (Windows Media Player 12 or later must be installed.)
	Frame rate	30 fps/60 fps
Movie playback		
	Restrictions	Images recorded with this instrument can be played back.
Movie output		
	Resolution	H1280 × V720 (Pixel)
	Output signal format	Outputs in the HDMI signal format
	Frame rate	60 fps
Manufacturer		EVIDENT CORPORATION 6666 Inatomi, Tatsuno-machi, Kamiina-gun, Nagano 399-0495, Japan

TIP:

- The images recorded with this instrument can be played back on a computer, etc., but the images recorded with other image recording devices such as a digital camera or a personal computer cannot be played back with this instrument.
- Other company names or product names described in this manual are either trademarks or registered trademarks of respective companies.
- The terms HDMI and HDMI High-Definition Multimedia Interface, and the HDMI Logo are trademarks or registered trademarks of HDMI Licensing Administrator, Inc. in the United States and other countries.

  HDMI® HIGH-DEFINITION MULTIMEDIA INTERFACE
- The SDHC and microSDHC logos are trademarks of SD-3C, LLC.
- iOS is a trademark or registered trademark of Cisco (U.S.).
- App Store is a service mark of Apple Inc.

10.3.2 External application standard

EMC Information	This product conforms to the following. This product is applied with the requirements of standard IEC/EN61326-1 concerning electromagnetic compatibility. • Emission Class A, applied to industrial environment requirements. • Immunity Applied to industrial environment requirements. Some interference may occur if this product is used in domestic location.
FCC Information	This product conforms to the following. • NOTE: This product has been tested and found to comply with the limits for a Class A digital device, pursuant to Part 15 of the FCC Rules. These limits are designed to provide reasonable protection against harmful interference when the product is operated in a commercial environment. This product generates, uses, and can radiate radio frequency energy and, if not installed and used in accordance with the instruction manual, may cause harmful interference to radio communications. Operation of this product in a residential area is likely to cause harmful interference in which case the user will be required to correct the interference at his own expense. • FCC WARNING: Changes or modifications not expressly approved by the party responsible for compliance could void the user's authority to operate the product. **FCC Supplier's Declaration of Conformity** Hereby declares that the product Product name: Industrial Endoscope, Industrial Endoscope Accessory Model Number: IV9000GA, IV98200GA, IV98300GA, MAJ-2482 Conforms to the following specifications: FCC Part 15, Subpart B, Section 15.107 and Section 15.109 Supplementary Information: This device complies with part 15 of the FCC Rules. Operation is subject to the following two conditions: (1) This device may not cause harmful interference, and (2) this device must accept any interference received, including interference that may cause undesired operation. Responsible Party Name: EVIDENT SCIENTIFIC, INC.

	Address: 48 Woerd Ave Waltham, MA 02453, U.S.A. Phone Number: 781-419-3900
WEEE Directive	The following applies to the mark to the left. In accordance with European Directive on Waste Electrical and Electronic Equipment, this symbol indicates that the product must not be disposed of as unsorted municipal waste, but should be collected separately. Refer to your local our distributor for return and/or collection systems available in your country.
Chinese RoHS Directive	This logo is the logos to be applied to electrical and electronic products sold in China based on “Management Methods for the Restriction of the Use of Hazardous Substances in Electrical and Electronic Products” and “Requirements as to logo for the restricted use of hazardous substances in the electrical and electronic products”. (Note) The number of logo indicates the years of period during which the hazardous substances contained in the electrical and electronic products will not leak or mutate suddenly under normal conditions It does not indicate the years of period during which the functional performance of product is warranted.

For Korea only

이 기기는 업무용 환경에서 사용할 목적으로 적합성평가를 받은 기기로서 가정용 환경에서 사용하는 경우 전파간섭의 우려가 있습니다.

10.3.3 Software license information

THIS PRODUCT IS LICENSED UNDER THE MPEG-4 VISUAL PATENT PORTFOLIO LICENSE FOR THE PERSONAL AND NON-COMMERCIAL USE OF A CONSUMER FOR

- (i) ENCODING VIDEO IN COMPLIANCE WITH THE MPEG-4 VISUAL STANDARD (“MPEG-4 VIDEO”) AND/OR
- (ii) DECODING MPEG-4 VIDEO THAT WAS ENCODED BY A CONSUMER ENGAGED IN A PERSONAL AND NONCOMMERTIAL ACTIVITIY AND/OR
- WAS OBTAINED FROM A VIDEO PROVIDER LICENSED BY Via Licensing Alliance LLC TO PROVIDE MPEG-4 VIDEO.

NO LICENSE IS GRANTED OR SHALL BE IMPLIED FOR ANY OTHER USE. ADDITIONAL INFORMATION MAY BE OBTAINED FROM Via Licensing Alliance LLC. SEE https://www.via-la.com/

10.3.4 Using open source software

This product may include (i) open source software; and (ii) other software whose source code is intentionally published (collectively, hereinafter referred to as “OSS”).

The OSS included in this product shall be licensed and distributed to you subject to the terms and conditions applied to the OSS. Please see such terms and conditions of the OSS in the following URL. The copyright owners of the OSS are listed in the following URL. THERE IS NO WARRANTY FOR THE OSS, TO THE EXTENT PERMITTED BY APPLICABLE LAW. THE OSS "AS IS" WITHOUT WARRANTY OF ANY KIND, EITHER EXPRESSED OR IMPLIED, INCLUDING, BUT NOT LIMITED TO, THE IMPLIED WARRANTIES OF MERCHANTABILITY AND FITNESS FOR A PARTICULAR PURPOSE.

THE ENTIRE RISK AS TO THE QUALITY AND PERFORMANCE OF THE OSS IS WITH YOU. SHOULD THE OSS PROVE DEFECTIVE, YOU ASSUME THE COST OF ALL NECESSARY SERVICING, REPAIR OR CORRECTION.

http://www.olympus-ims.com/rvi-products/iplex-gair/oss-license/

You shall not inquire information relating to the source codes obtained in the above URL from us.

10.3.5 AVC Patent Portfolio License

THIS PRODUCT IS LICENSED UNDER THE AVC PATENT PORTFOLIO LICENSE FOR THE PERSONAL AND NONCOMMERCIAL USE OF A CONSUMER TO

- (i) ENCODE VIDEO IN COMPLIANCE WITH THE AVC STANDARD ("AVC VIDEO") AND/OR
- (ii) DECODE AVC VIDEO THAT WAS ENCODED BY A CONSUMER ENGAGED IN A PERSONAL AND NONCOMMERCIAL ACTIVITY AND/OR
- WAS OBTAINED FROM A VIDEO PROVIDER LICENSED BY Via Licensing Alliance LLC TO PROVIDE AVC VIDEO.

NO LICENSE IS GRANTED OR SHALL BE IMPLIED FOR ANY OTHER USE. ADDITIONAL INFORMATION MAY BE OBTAINED FROM Via Licensing Alliance LLC. SEE https://www.via-la.com/

10.4 Optical adapter specifications

The following table shows the performances when the optical adapter (optional) is mounted on the insertion tube.

Name		AT120D/NF -IV98G	AT120D/FF -IV98G	AT120S/NF -IV98G	AT120S/FF -IV98G	AT220D -IV98G
Product abbreviation		H120DN	H120DF	H120SN	H120SF	H220
Character color		Red	Green	Red	Green	Black
Optical system	Field of view	120°	120°	120°	120°	220°
	Direction of view	Forward view	Forward view	Side view	Side view	Forward view
	Depth of field*1	4 to 190 mm	25 to ∞ mm	1 to 25 mm	6 to ∞ mm	1 to ∞ mm
Distal end	Outer diameter*2	ø8.5 mm	ø8.5 mm	ø8.5 mm	ø8.5 mm	ø10 mm
	Rigid distal end length*3	26.4 mm	26.4 mm	33.3 mm	33.3 mm	27.4 mm

*1 Indicates the range within which the image can be viewed clearly.

*2 120D and 120S can be inserted into a 8.5 mm hole and 220D into a 10 mm hole respectively when they are mounted on the insertion tube.

*3 Indicates the length of the rigid portion of the distal end when mounted on the insertion tube

System chart

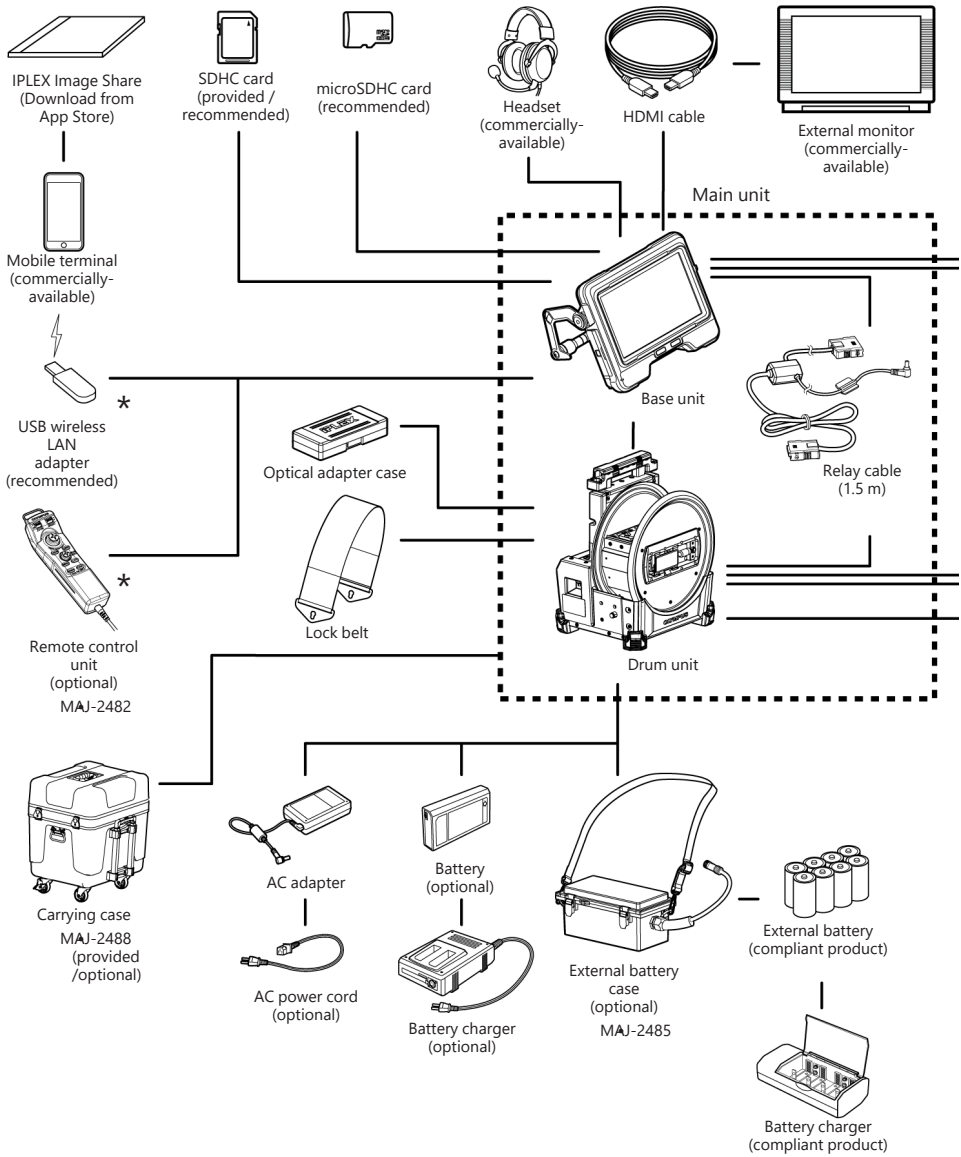

*When you use the USB wireless LAN adapter and the remote control unit at the same time, the USB hub (commercially-available) is necessary.

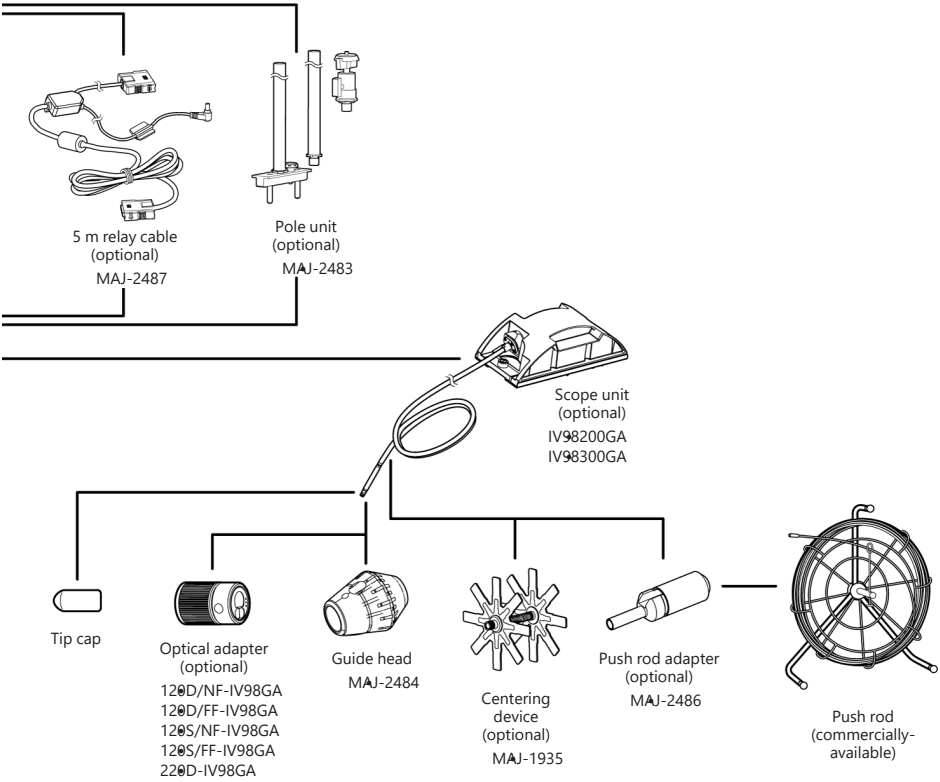

TIP:

This instrument can be operated away from the base unit using the relay unit (recommended product). (Remote operation)

For the system chart of the remote operation, see "Remote operation" (page 121).