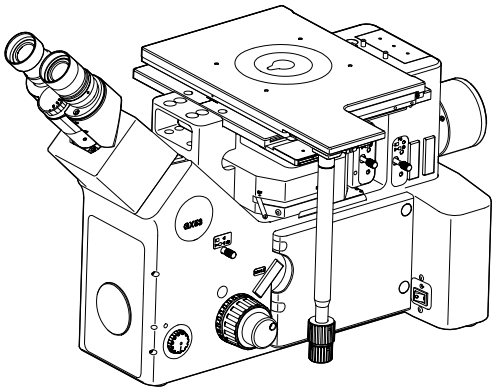

Instructions

GX53

Inverted system metallurgical microscope

Notes

This instruction manual is for the EVIDENT microscope.
To ensure safety, obtain optimum performance and to familiarize yourself fully with the use of this product, we recommend that you study this manual thoroughly before operating this product, and always keep this manual at hand when operating this product.
Retain this instruction manual in an easily accessible place near the work desk for future reference.
For details of products included in the configuration of this microscope, see page 10.

Optical Microscope and Accessory

This product is applied with the requirements of standard IEC/EN61326-1 concerning electromagnetic compatibility.

- Emission Class A, applied to industrial environment requirements.
- Immunity Applied to industrial environment requirements.

Some interference may occur if this product is used in domestic location.

In accordance with European Directive on Waste Electrical and Electronic Equipment, this symbol indicates that the product must not be disposed of as unsorted municipal waste, but should be collected separately.
Refer to your local EVIDENT distributor in EU for return and/or collection systems available in your country.

NOTE: This product has been tested and found to comply with the limits for a Class A digital device, pursuant to Part 15 of the FCC Rules. These limits are designed to provide reasonable protection against harmful interference when the product is operated in a commercial environment. This product generates, uses, and can radiate radio frequency energy and, if not installed and used in accordance with the instruction manual, may cause harmful interference to radio communications.
Operation of this product in a residential area is likely to cause harmful interference in which case the user will be required to correct the interference at his own expense.

FCC WARNING: Changes or modifications not expressly approved by the party responsible for compliance could void the user's authority to operate the product.

For Korea only

이 기기는 업무용 환경에서 사용할 목적으로 적합성평가를 받은 기기로서 가정용 환경에서 사용하는 경우 전파간섭의 우려가 있습니다.

Contents

Introduction 1

Safety precautions 2

1 Nomenclature of units 9

2 List of combinable units 10

3 Basic operations of the microscope (Reflected light brightfield/darkfield observations) 14

3-1 Reflected light brightfield/darkfield observation procedures 14

3-2 Turning ON the main switch 16

3-3 Selecting the observation method 17

3-4 Selecting between the eyepiece light path and the camera light path 18

3-5 Placing a sample 19

1 Placing a sample 19

2 Moving the sample 19

3-6 Selecting the objective 20

3-7 Focusing 21

1 Focusing 21

2 Removing the fine focusing knob 21

3 Adjusting the tension of the coarse focusing knob 21

3-8 Adjusting the brightness 22

1 When the reflected LED light source is combined 22

2 When the halogen lamp housing is combined 22

3 When the mercury lamp housing is combined 22

4 When the light source is combined 22

3-9 Adjusting the observation tube 23

1 Adjusting the interpupillary distance 23

2 Adjusting the diopter 23

3 Using the eye shades 25

4 Adjusting the tilting (U-TBI90 only) 25

3-10 Adjusting the aperture diaphragm (AS) 26

3-11 Adjusting the field diaphragm (FS) 27
3-12 Using the filter sliders 28
3-13 Observing the image using the mercury burner 29
4 Various observation methods 30
4-1 Reflected light differential interference contrast (DIC) observation 30
4-2 Reflected light simple polarization observation 31
4-3 Reflected light brightfield/darkfield simultaneous observation 32
4-4 Transmitted light brightfield observation 33
4-5 Transmitted light simple polarization observation 34
4-6 Using the analyzer/polarizer for reflected light observation 35
4-7 Using the DIC slider 36
1 Inserting the DIC slider 36
2 Adjusting the prism of the DIC slider 37
4-8 Using the MIX slider for reflected light observation 38
1 Inserting the MIX slider for reflected light observation 38
2 Turning ON the illumination of the MIX slider for reflected light observation 39
3 Adjusting the brightness of the illumination 39
4 Selecting the illumination pattern 40
4-9 Adjusting the units for transmitted light observation 41
1 Centering the condenser 41
2 Tilting of the illumination column 43
3 Flipping up the condenser holder 43
5 Image acquisition 44
6 Replacement of optical parts 45
6-1 Replacing the eyepiece 45
6-2 Replacing the objective 47
6-3 Replacing the halogen bulb 48
6-4 Replacing the mercury burner 50
6-5 Replacing the filter 54

7 Troubleshooting 56

8 Specifications 60

9 Optical performance list «UIS2 series» 62

10 Assembly 65

10-1 Assembly diagram 65

10-2 Assembly procedures 66

1 Attaching the light source 66

2 Attaching the objective 68

3 Attaching the revolving nosepiece 68

4 Attaching the MIX slider / DIC slider for reflected light observation 71

5 Attaching the stage 72

6 Attaching the observation tube 73

7 Attaching the eyepiece 73

8 Connecting cables 74

9 Connecting the AC adapter and power cord 76

10 Attaching the ND filter for darkfield observation 77

11 Attaching the illumination column 78

12 Attaching the halogen bulb for transmitted light observation 78

13 Attaching the lamp housing for transmitted light observation 78

14 Setting the filters 79

15 Attaching the condenser 79

16 Adjusting the tension of the condenser height adjustment knob 80

17 Attaching the scale slider 80

18 Attaching and adjusting the camera adapter 81

10-3 Connection with PC 81

11 Preventive inspection sheet for illumination devices 82

12 Proper selection of the power supply cord 83

Introduction

This microscope employs the UIS2 optical systems. If you use an eyepiece, objective or condenser, etc. together with this microscope, be sure to use those of UIS2 optical system series.
Using inappropriate units restricts the performance.
(There are other units usable with the UIS series. Contact EVIDENT or refer to the latest catalogs.)

Configuration of instruction manuals

Read all instruction manuals provided with the units you purchased.
The following instruction manuals are prepared for the units to be used with this product.

Manual names	Main contents
Inverted system metallurgical microscope (this instruction manual)	Reflected light brightfield observation, reflected light darkfield observation, reflected light differential interference contrast observation, reflected light simple polarization observation and transmitted light illumination observation
BX3M-CB/CBFM Control box/FM Control box	Control box (BX3M-CBFM)
U-RFL-T power supply for mercury burner / U-RX-T power supply for xenon burner	Connection of the mercury lamp housing with the power supply
TH4 power supply for halogen bulb	Connection of the halogen lamp housing with the power supply
GX-SLM Scale slider	Scale slider (GX-SLM)
U-LGPS LED and LDP light source	Connection of the LED and LDP light source with the liquid light guide, etc.
BX3M-PSLED LED power supply	LED power supply for transmitted light illumination

Intended use

This product is designed to observe magnified images of samples for industrial applications.

Appropriate samples include semiconductors, electrical components, molded parts or mechanical parts.

Industrial applications include observation, inspection or measurements.

Do not use this product for any purpose other than its intended use.

Safety precautions

If the product is used in a manner not specified by this manual, the safety of the user may be imperiled. In addition, the product may also be damaged.
Read this instruction manual carefully and always use this product according to this instruction manual.

The following symbols are used in this instruction manual.

⚠CAUTION : Indicates a potentially hazardous situation which, if not avoided, may result in minor or moderate injury.

NOTE : Indicates a potentially hazardous situation which, if not avoided, may result in damage to the equipment or other property.

TIP : Indicates the useful knowledge or information for use.

⚠ CAUTION - Installation of the product -

Install the product on a sturdy, level table or bench.

- If you install the microscope on an unstable table or a tilted table, the microscope may topple and you may get injured.
- For safety, do not place a mat, etc. under the product.

⚠ CAUTION - Electric safety -

Always use the AC adapter and the power cord specified by EVIDENT.

If the proper AC adapter, the power cord and cables are not used, the electric safety and the EMC (Electro-Magnetic Compatibility) performance of the product cannot be assured. If no power cord is provided, please select the proper power cord by referring to the section “Proper selection of the power cord” at the end of this instruction manual.

Always connect the ground terminal.

Connect the ground terminal of the power cord and that of the power outlet. If the product is not grounded, our intended electric safety and EMC performance of the product cannot be assured.

Do not use the product in close proximity to the sources of strong electromagnetic radiation.

Proper operation may be interfered. The electromagnetic environment should be evaluated prior to operation of the product.

Disconnect the power cord in case of emergency.

In case of emergency, be sure to unplug the power cord from the power cord connector on the product or from the wall power outlet. Install the product at the location where you can reach the power cord connector or the power outlet at hand to disconnect the power cord quickly.

This product is designed with intension to be used in the industrial environment for the EMC performance. Using this equipment in the residential environment may affect other equipment.

⚠ CAUTION - LED (light emitting diode) -

Do not look directly at the light from the LED lamp housing for a long time.

If you feel that the light from LED lamp housing is too bright during observation, adjust the light intensity using the brightness control knob before continuing the observation. The LED built in this product is basically eye-safe. However, do not look directly at the light from the LED lamp housing for a long time, since it may cause damage to your eyes.

Do not look directly at the light coming out from the objective or the specular reflection light from the sample.

Do not look directly at the light coming out from the objective for a long time, since it may cause damage to your eyes.

Do not expose your skin to the light coming out from the objective for a long time.

If your skin is exposed to the light coming out from the objective for a long time, you may get burned.

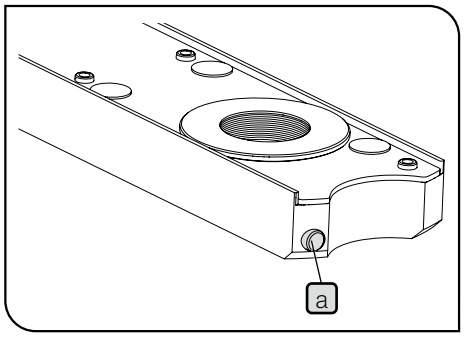

Do not press the micro switch of the MIX slider for reflected light observation (U-MIXR) with your finger.

If you press the micro switch a of the MIX slider for reflected light observation with your finger, the MIX slider for reflected light observation may emit the light.

Do not insert the MIX slider for reflected light observation (U-MIXR) upside down.

Do not insert the MIX slider for reflected light observation upside down. Otherwise, the light coming out from the MIX slider for reflected light observation enters your eyes through the eyepiece and your eyes may be damaged.

⚠ CAUTION - Lamp (halogen bulb and mercury burner) -

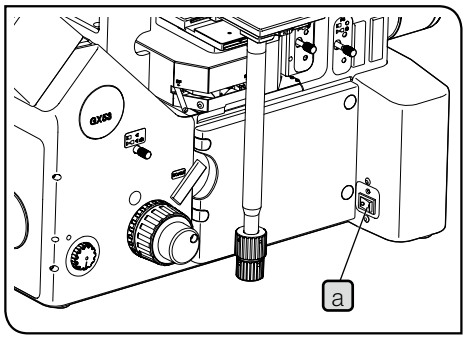

Remove the power cord from the product when replacing the lamp.

To avoid electric shock hazards and burns when replacing the lamp, set the main switch a to O(OFF), and disconnect the power cord from the product in advance. When you replace the lamp immediately after use of the microscope, wait until the lamp housing and the lamp are sufficiently cooled down.

Applicable lamp	[For U-LH100L-3] 12V100WHAL-L (made by PHILIPS Co. 7724I) 12V100WHAL (made by PHILIPS Co. 7023) [For U-LH100HGAPO, U-LH100HG] USH-103OL (made by Ushio Inc.)

Secure the sufficient space around the lamp housing.

The surface of the lamp housing on the back of the microscope gets very hot. Therefore, when installing the microscope, secure the sufficient space around the lamp housing (100 mm or more), particularly on the top surface and bottom surface. After the microscope is installed, make sure that the space below the lamp housing is sufficiently secured.

- As the UV ray of the mercury burner is harmful to your eyes, do not light the mercury burner when the lamp housing is not attached to the microscope.
- The lifetime of the illumination device is influenced significantly by operating conditions (ambient temperature/humidity, voltage of the power supply, lighting time, etc.), but is approximately eight(8) years or 20,000 illumination hours if operating it 8 hours a day, whichever is shorter, as a rough guideline.
- Since the lamp generates a high heat, perform the inspection according to “11 Preventive inspection sheet for illumination devices” on page 82. If you find the unexpected phenomena, e.g. smoke, etc. during operation, turn OFF the power immediately and contact EVIDENT.

⚠ CAUTION - Liquid Light Guide -

Do not use the liquid light guide that is not conformed to this product.

You may get burned or your eyes may be damaged. For the liquid light guide that is conformed to this product, see page 60.

Do not remove the liquid light guide when the lamp is turned ON.

The light emitted from U-LGPS may cause a fire. In addition, you may get burned or your eyes may be damaged.

Remove the liquid light guide after the liquid light guide and the LDP light source are fully cooled down.

Otherwise, you may get burned.

⚠ CAUTION - Prevention of electric shock -

Never insert any tools or metal fragments in the air vents of the product.
It could cause electric shock or failure of the product.

Do not bend, pull or bundle the power cord and cables.
Otherwise cords and cables could be damaged, causing a fire or an electric shock.

Keep the power cord and cables sufficiently away from the lamp housing.
If the power cord and cables contact a hot area of the lamp housing, they could melt and cause electric shock.

Do not touch the product with wet hands.
In particular, if you touch the main switch of the power unit or the power cord with wet hands, electric shock, ignition or failure of the product may be caused.

⚠ CAUTION - Prevention of injury

Be careful not to drop the glass plate.
If you are using the glass pate, be careful not to drop the glass plate. If the glass plate drops and is broken, you may get injured by the broken pieces.

⚠ CAUTION - Prevention of fire -

Do not repair, disassemble or remodel.
Never repair, disassemble or remodel this product. Otherwise, fire may result. The repair work must be carried out only by those authorized by EVIDENT.

If you need repairs, contact EVIDENT for assistance.

⚠ CAUTION - Safety symbols -

The following symbols are placed on this product.
Study the meaning of the symbols and always use the product in the safest possible manner.

Symbol	Meaning
⚠	Indicates a non-specific general hazard. Follow the description given after this symbol or in the instruction manual.
♨	Indicates that the surface becomes hot, and should not be touched with bare hands. It may cause burns.
ϟ	Indicates high voltage. Take special care to prevent electric shock.
I	Indicates that the seesaw type main switch is ON. (Seesaw type is the type of switch where ON or OFF is selected by pressing it to ON or OFF side.)
O	Indicates that the seesaw type main switch is OFF.

When caution labels are dirty or peeled off, contact EVIDENT for replacement or inquiries.

Label position and instruction

The labels are attached to the portions which require special cautions during use and operation. Be sure to follow these instructions.

Label position	Label	Instructions in instruction manual	Page
Left side on rear of microscope frame External power supply for halogen bulb (TH4-100/TH4-200) Control box (BX3M-CBFM) Relay unit for coded revolving nosepiece (GX-IFRES) Coded function system (U-CBS)	⚠	Electric safety	page 3
Caution tag provided with microscope frame	⚠	Cautions for darkfield observation and differential interference contrast observation	page 77
Lamp housing mount on rear of microscope frame Adapter for mercury lamp housing (MX-HGAD) 100W halogen lamp housing (U-LH100L-3)	♨	High temperature	page 4
100W mercury lamp housing (U-LH100HG) 100W mercury apo lamp housing (U-LH100HGAPO)	♨	High temperature	page 4
	ϟ	Electric shock	page 5
LED and LDP light source(U-LGPS)	⚠	Electric safety	page 3
		Electric shock	page 5
	♨	High temperature	page 4
ND filter slider (U-25ND25-25/U-25ND25/U-25ND6) Frost filter slider (U-25FR) Interference contrast filter slider (U-25IF550) L42 filter slider (U-25L42) Light balancing filter slider (U-25LBD) Yellow filter slider (U-25Y48) Empty slider (U-25L42) Light balancing amber filter slider (U-25LBA)	♨	High temperature	page 54

⚠ CAUTION - Carrying the product -

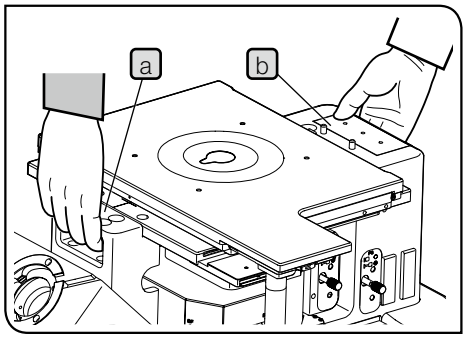

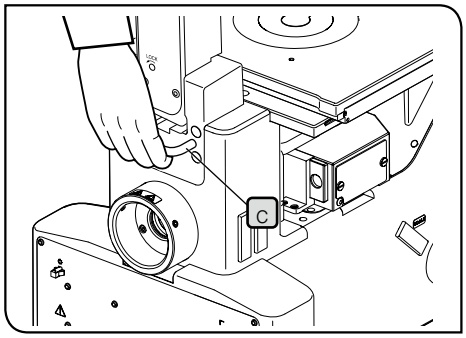

Remove samples and units attached.

1. Make sure that the stage and revolving nosepiece are attached securely. If the illumination column is attached, make sure that the illumination column in tilted status is secured.
2. Be sure to remove samples and units, such as observation tube, camera adapter and lamp housing, etc.
   If you carry the microscope with units attached, the weight is increased and the risk of dropping the microscope may be caused.

Be sure to carry the microscope by two persons.

When carrying the microscope, be sure to carry it by two persons. One person holds the front holding section a and the other person holds the rear holding section b as shown in the picture on the upper left. If the illumination column for transmitted light observation is attached, hold the holding section c as shown in the picture on the lower left.

Do not slide on the top surface of the table.

Do not move the microscope by sliding it on the top surface of the table. The rubber legs may be damaged.

If you need to pack this product for shipping to a distant location, etc., the dedicated transport tools and packaging materials are necessary. Be sure to contact EVIDENT for assistance.

Handling Precautions

NOTE

- This product is a precision instrument. Handle it with care and avoid subjecting it to a sudden or severe impact.
- Never disassemble any part of the product. Otherwise, failure may result.
- Do not use the product in areas where it may be subjected to direct sunlight, high temperature and/or humidity, dust or vibrations.
  (For conditions of operating environments, see “8 Specifications” on page 60).
- Before attaching or detaching the units other than the MIX slider for reflected light observation (U-MIXR), set the main switch of the microscope to O(OFF).
- If units are not attached, be sure to attach the caps that are attached to the unit mounts to prevent from dust.
- When observing a heavy sample exceeding 1 kg or using this product on a desk subject to external vibration, if the vibration bothers you, use the anti-vibration table.
- Remove the pad for protecting the focusing unit that is attached as factory default. For removing procedures, see “Attaching the stage” on page 72.

Maintenance and Storage

1. Do not leave stains or fingerprints on the lenses or filters. If they get dirty, blow away dust with a commercially available blower and gently wipe the lens or filter with a piece of cleaning paper (or clean gauze).
   Only when cleaning fingerprints and oil stains, slightly moisten a piece of cleaning paper with commercially available absolute alcohol and wipe them off with it.

⚠CAUTION **Since the absolute alcohol is highly flammable, it must be handled carefully. Be sure to keep it away from open flames or potential sources of electrical sparks. For example, the electrical equipment that is switched ON and OFF may cause the ignition of a fire. Also, always use absolute alcohol only in a well-ventilated room.**

2. Wipe the portions other than lenses with a dry soft cloth. If the dirt cannot be removed by dry-wiping, moisten a soft cloth with diluted neutral detergent and wipe the dirty surface with it.

NOTE **Do not use the organic solvents because they may deteriorate the coated surface or plastic parts.**

3. After using this product, be sure to set the main switch to O(OFF), wait until the lamp housing is cooled down sufficiently, and keep it covered with a dust cover during storage.
4. Before disposing of this product, be sure to check the regulations and rules of your local government and follow them. Contact EVIDENT for any questions.
5. If the hour counter of the power supply (U-RFL-T) shows 300 hours, set the main switch to O (OFF) for safety purpose, wait 10 minutes or more and replace the lamp. (See page 50.)

NOTE **The mercury burner contains high-pressure gas in the tube. If you keep using the mercury burner exceeding its lifetime significantly, the distortion accumulates in the glass tube to cause the explosion in rare cases.**

In case that the mercury burner explodes

Follow the procedures below in case that the mercury burner explodes.

- Unplug the power cord from the outlet. Leave the place and ventilate for at least 30 minutes.
- After the burner and the lamp housing have cooled down, collect the remaining mercury with packing tape, paper or dropper, etc.
- Seal the collected mercury and used tools completely in a nonmetallic container, and ask the waste disposer to dispose of them.
- If there is any possibility that you have inhaled mercury steam, consult the doctor immediately and follow his/her instructions.

6. The used mercury burner must be disposed of as industrial waste. If you cannot dispose of it by yourself properly, contact EVIDENT for assistance.

1 Nomenclature of units

The diagram shown in this section shows the major units only. For units combinable to this product, see “2 List of combinable units”.
For units marked “*”, refer to the instruction manuals provided separately.

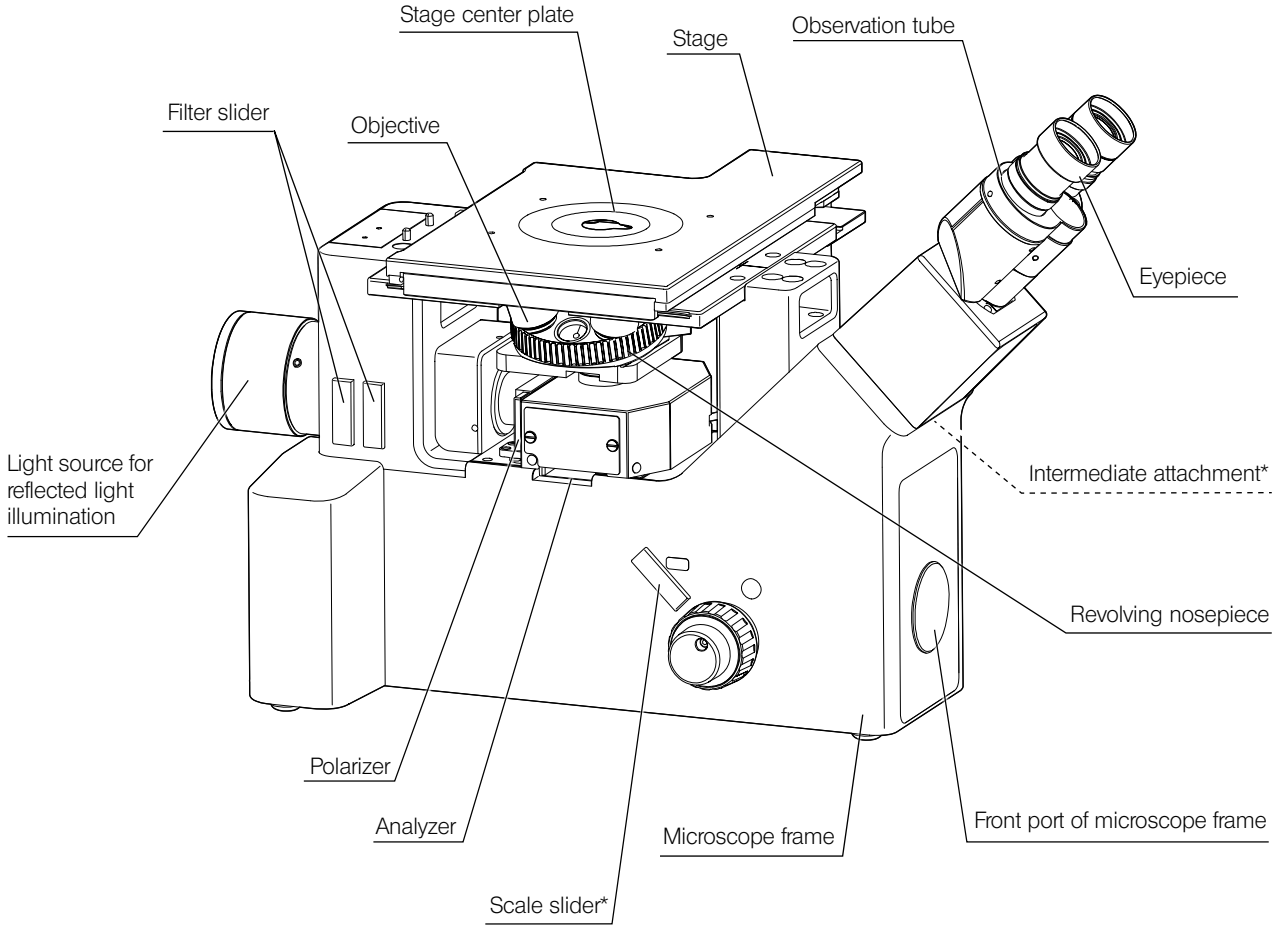

2 List of combinable units

●: Combination available (including units with restrictions)
×: Combination prohibited
—: Unnecessary for observation

Unit	Observation method	Reflected light					Transmitted light	
		Brightfield	Darkfield	Brightfield/ darkfield simultaneously	Simple polarization	Differential interference contrast	Brightfield	Simple polarization
Microscope frame	GX53F	●	●	●	●	●	●	●
Observation tube	U-BI90	●	●	●	●	●	●	●
	U-BI90CT	●	●	●	●	●	●	●
	U-TBI90	●	●	●	●	●	●	●
	U-TR30H-2	●	●	●	●	●	●	●
Intermediate attachment *Only one type is usable.	U-CA	●	●	●	●	●	●	●
	U-ECA	●	●	●	●	●	●	●
	U-EPA2	●	●	●	●	●	●	●
	GX-SPU	●	●	●	●	●	●	●
	IX-ATU	●	●	●	●	●	●	●
Illuminator Option	U-DULHA	●	●	●	●	●	—	—
	MX-HGAD	●	●	●	●	●	—	—
	U-LLGAD	●	●	●	●	●	—	—
Light source for reflected light illumination	BX3M-LEDR	●	●	●	●	●	—	—
	U-LH100HGAPO	●	●	●	●	●	—	—
	U-LH100HG	●	●	●	●	●	—	—
	U-LH100L-3	●	●	●	●	●	—	—
	U-LGPS	●	●	●	●	●	—	—
Transmitted light illumination	IX2-ILL100	—	—	—	—	—	●	●
	PMG3-LWCD	—	—	—	—	—	●	●
Light source for transmitted light illumination	BX3M-LEDT	—	—	—	—	—	●	●
	U-LH100L-3	—	—	—	—	—	●	●
Power supply	U-RFL-T	●	●	●	●	●	—	—
	TH4-100	●	●	●	●	●	●	●
	TH4-200	●	●	●	●	●	●	●
	BX3M-PSLED	—	—	—	—	—	●	●
Light sources	U-LLG150	●	●	●	●	●	—	—
	U-LLG300	●	●	●	●	●	—	—
	U-RMT	●	●	●	●	●	●	●
	U-CST	●	●	●	●	●	—	—
	U-CLA	●	●	●	●	●	—	—

●: Combination available (including units with restrictions)
×: Combination prohibited
—: Unnecessary for observation

Unit	Observation method	Reflected light					Transmitted light	
		Brightfield	Darkfield	Brightfield/ darkfield simultaneously	Simple polarization	Differential interference contrast	Brightfield	Simple polarization
Revolving nosepiece	U-P4RE	●	×	×	●	●	●	●
	U-P5BDRE	●	●	●	●	●	●	●
	U-P6RE	●	×	×	●	●	●	●
	U-5RE-2	●	×	×	●	×	●	●
	U-D6RE	●	×	×	●	●	●	●
	U-D6RE-ESD-2	●	×	×	●	●	●	●
	U-D7RE	●	×	×	●	●	●	●
	U-5BDRE	●	●	×	●	×	●	●
	U-D5BDRE	●	●	●	●	●	●	●
	U-D6BDRE	●	●	●	●	●	●	●
Revolving nosepiece (Coded type)	U-5RES-ESD	●	×	×	●	×	●	●
	U-D5BDRES-ESD	●	●	●	●	●	●	●
	U-D6RES	●	×	×	●	●	●	●
	U-D6BDRES-S	●	●	●	●	●	●	●
	U-D7RES	●	×	×	●	●	●	●
Objective adapter	BD-M-AD	●	●	×	●	●	●	●
Stage	GX-SFR	●	●	●	●	●	●	●
	IX2-SFR	●	●	●	●	●	●	●
	GX-SVR	●	●	●	●	●	●	●
	IX2-GS	●	●	●	●	●	●	●
	IX-SVL-2	●	●	●	●	●	●	●
Stage option	CK40-CPG30	●	●	●	●	●	●	●
	IX-CP50	●	●	●	●	●	●	●
	IX2-GCP	●	●	●	●	●	●	●
	GX-CP	●	●	●	●	●	●	●
Slider for reflected light illumination	U-25ND6	●	●	●	●	●	—	—
	U-25ND25	●	●	●	●	●	—	—
	U-25ND50	●	●	●	●	●	—	—
	U-25LBD	●	●	●	●	●	—	—
	U-25IF550	●	●	●	●	●	—	—
	U-25Y48	●	●	●	●	●	—	—
	U-25L42	●	●	●	●	●	—	—
	U-25FR	●	●	●	●	●	—	—
	U-25LBA	●	●	●	●	●	—	—
	U-25	●	●	●	●	●	—	—
DIC slider	U-DICR	×	×	×	×	●	×	×
	U-DICRHC	×	×	×	×	●	×	×
	U-DICRHC	×	×	×	×	●	×	×

●: Combination available (including units with restrictions)
×: Combination prohibited
—: Unnecessary for observation

Unit	Observation method	Reflected light					Transmitted light	
		Brightfield	Darkfield	Brightfield/ darkfield simultaneously	Simple polarization	Differential interference contrast	Brightfield	Simple polarization
MIX slider for reflected light observation	U-MIXR	—	×	●	—	×	—	—
	U-MIXRCBL	—	×	●	—	×	—	—
Polarizing element	GX-PO	×	×	×	●	●	—	—
	GX-POTP	×	×	×	●	●	—	—
	GX-AN	×	×	×	●	●	×	●
	GX-AN360	×	×	×	●	●	×	●
Filter slider	GX-FSL	●	●	●	●	●	-	●
Φ25 mm filter	25LBD	●	●	●	●	●	—	—
	25ND6	●	●	●	●	●	—	—
	25ND25	●	●	●	●	●	—	—
	25FR	●	●	●	●	●	—	—
	25IF550	●	●	●	●	●	—	—
Φ45 mm filter	U-POT	—	—	—	—	—	×	●
	43IF550-W45	—	—	—	—	—	●	●
	45-LBD-IF	—	—	—	—	—	●	●
	45-ND6	—	—	—	—	—	●	●
	45-ND25	—	—	—	—	—	●	●
Scale slider	GX-SLM	●	●	●	●	●	●	●
	GX51-SLMG5	●	●	●	●	●	●	●
	GX51-SLMG10	●	●	●	●	●	●	●
	GX51-SLMG20	●	●	●	●	●	●	●
	GX51-SLMG50	●	●	●	●	●	●	●
	GX51-SLMG100	●	●	●	●	●	●	●
	GX51-SLMGS	●	●	●	●	●	●	●
	GX51-SLMGH	●	●	●	●	●	●	●
	GX-SLM	●	●	●	●	●	●	●
Mirror unit	CK40M-MS	●	●	●	●	●	●	●
Camera adapter	U-TV1XC	●	●	●	●	●	●	●
	U-TV0.63XC	●	●	●	●	●	●	●
	U-TV0.5XC-3	●	●	●	●	●	●	●
	U-TV0.35XC-2	●	●	●	●	●	●	●
	U-TV0.25XC	●	●	●	●	●	●	●
	U-CMAD3	●	●	●	●	●	●	●
	U-TV1X-2	●	●	●	●	●	●	●
	GX-TV0.5XC	●	●	●	●	●	●	●
	GX-TV0.7XC	●	●	●	●	●	●	●
	U-FMT	●	●	●	●	●	●	●
	U-CMT	●	●	●	●	●	●	●
	IX-TVAD	●	●	●	●	●	●	●

●: Combination available (including units with restrictions)
×: Combination prohibited
—: Unnecessary for observation

Unit	Observation method	Reflected light					Transmitted light	
		Brightfield	Darkfield	Brightfield/ darkfield simultaneously	Simple polarization	Differential interference contrast	Brightfield	Simple polarization
Controller	DP2-SAL	●	●	●	●	●	●	●
Hand switch	BX3M-HS	●	●	●	●	●	●	●
	U-HSEXP	●	●	●	●	●	●	●
	TH4-HS	●	●	●	●	●	●	●
Control box	BX3M-CBFM	●	●	●	●	●	●	●
	U-CBS	●	●	●	●	●	●	●
	GX-IFRES	●	●	●	●	●	●	●
Eyepiece	WHN10X	●	●	●	●	●	●	●
	WHN10X-H	●	●	●	●	●	●	●
	CROSSWHN10X	●	●	●	●	●	●	●
Objective	See “9 Optical performance list «UIS2 series»” on page 62.							

3 Basic operations of the microscope (Reflected light brightfield/darkfield observations)

This section describes the operating procedures of the reflected light brightfield/darkfield observations which are the basis of observation methods. The polarization observation and the differential interference contrast observation, etc. are described in “4 Various observation methods” on page 30.

3-1 Reflected light brightfield/darkfield observation procedures

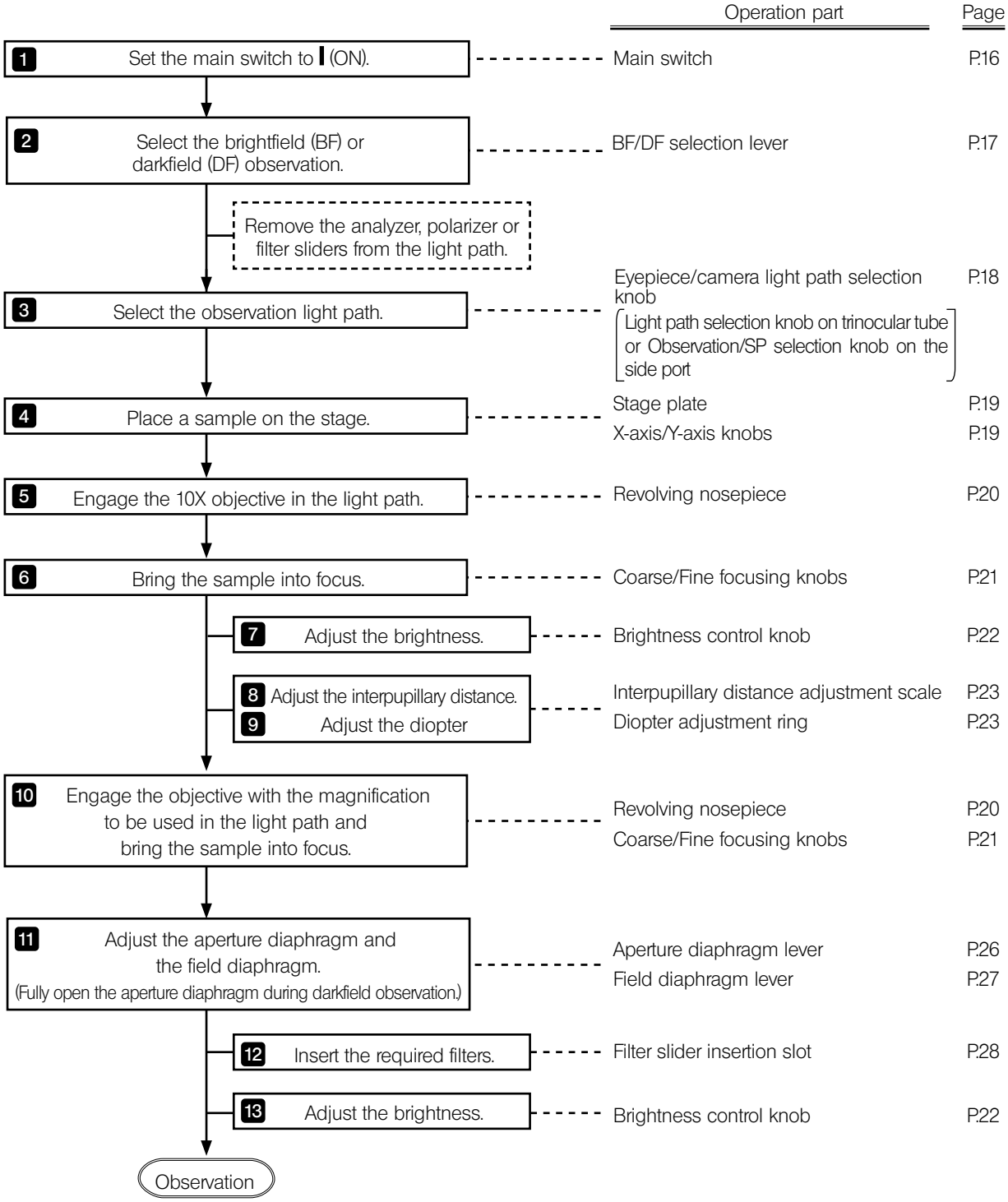

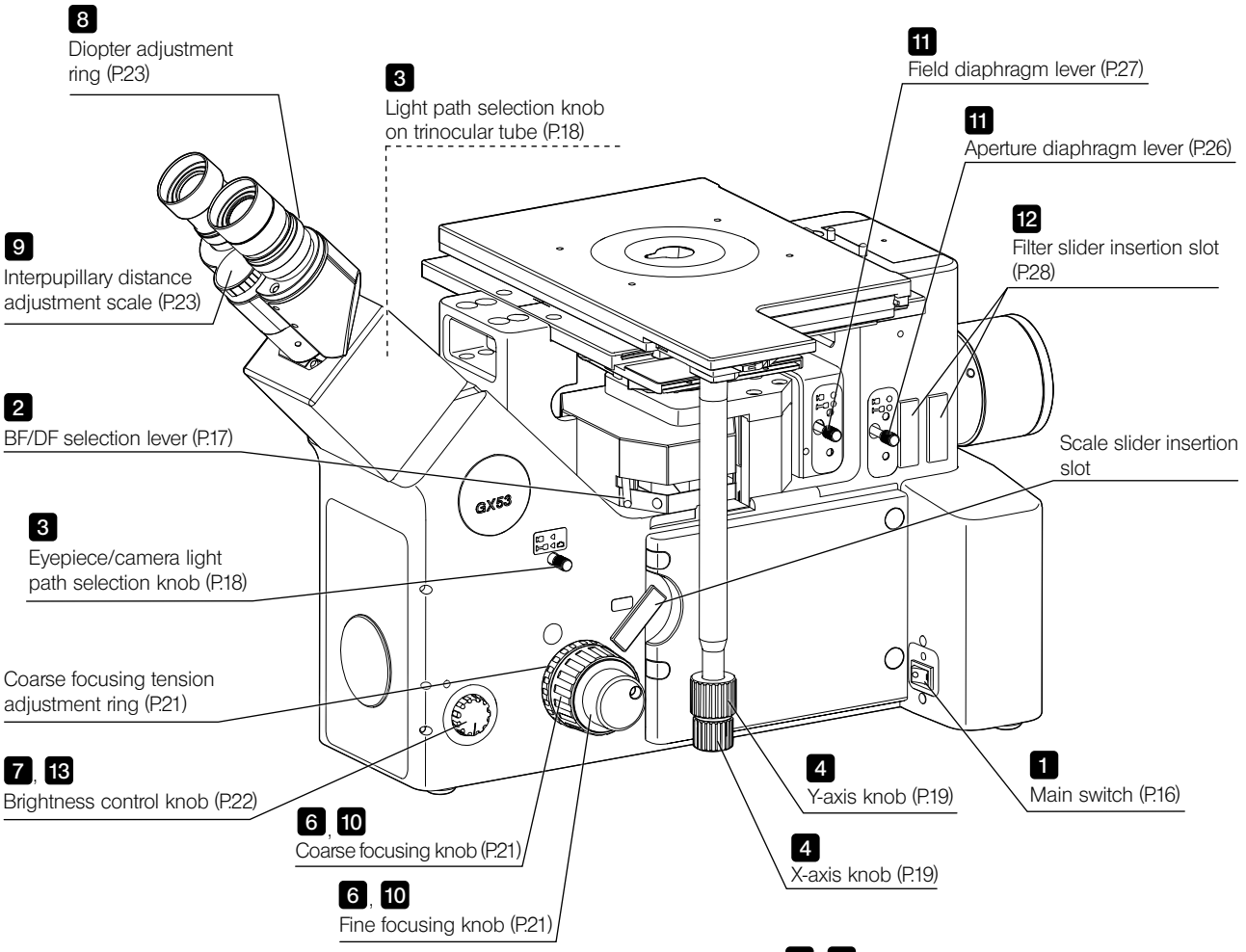

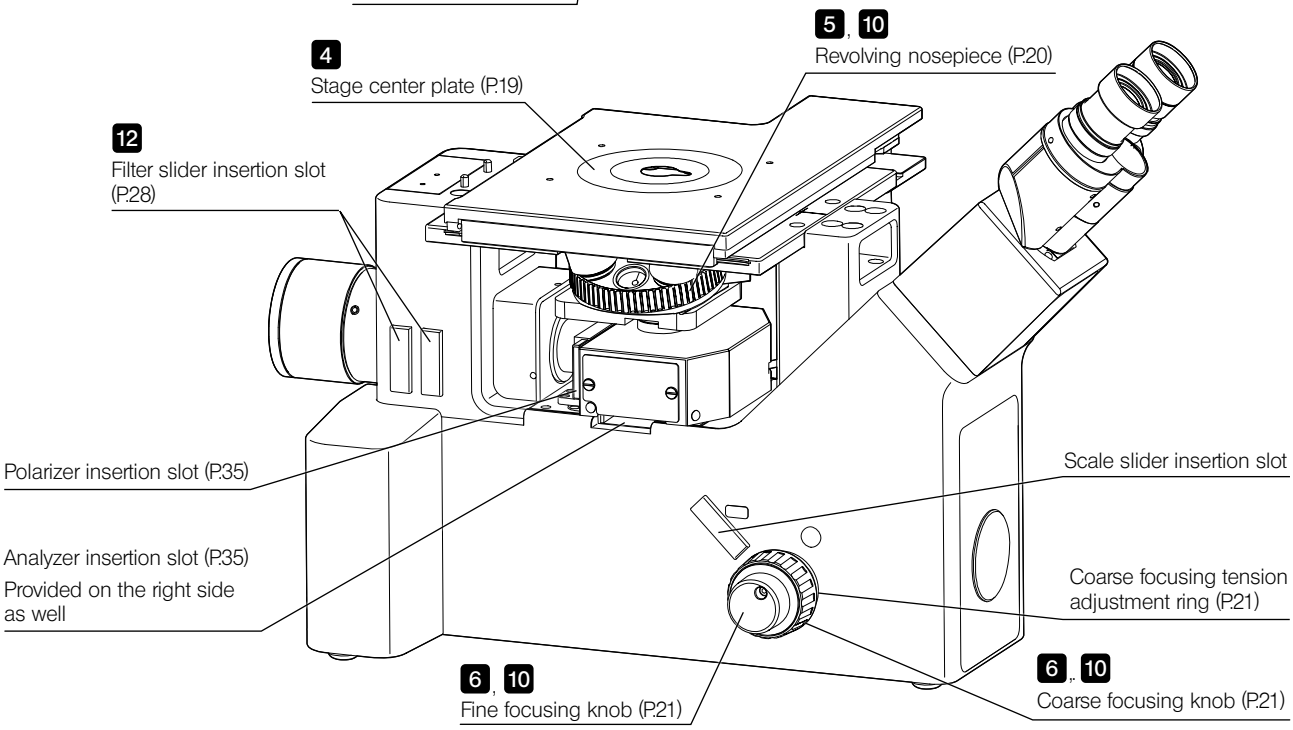

TIP Make a copy of this flow chart and diagram, and place it near the microscope so that you can use it when operating the microscope.

3-2 Turning ON the main switch

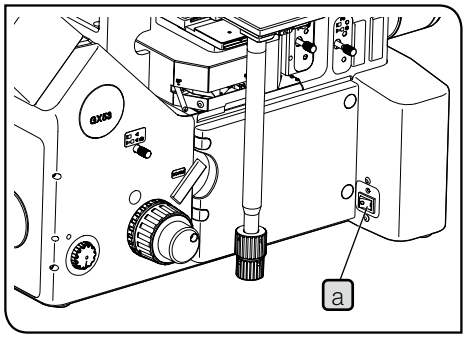

When using the reflected LED light source (BX3M-LEDR)

1 Set the main switch a to I (ON).

When using the light source other than the reflected LED light source (BX3M-LEDR)

1 Set the main switch of each unit to I (ON).

Combinable units	Unit to set to ON
Mercury burner	Main switch of the power supply for mercury burner (U-RFL-T)*
Halogen bulb	Main switch of the power supply for halogen bulb (TH4-100/TH4-200)
Light source	Power supply switch of the LED and LDP light source (U-LGPS)

* When using the mercury burner, the arc image becomes stable 5 to 10 minutes after turning it ON.

TIP The discharge type mercury burner may not be turned ON in one operation due to its nature. In this case, set the main switch to O (OFF) once, wait 5 to 10 seconds and set it to I (ON) again.

NOTE
- **Do not turn OFF the mercury burner for two hours after turning it ON in order to prevent the burner from reducing its lifetime.**
- **When turning ON the mercury burner again, wait until the vapor of the mercury burner is cooled down and devolatilized. Wait approx. 10 minutes and turn it ON.**

When using the control box (BX53M-CBFM)

1 Set the main switch to I (ON).

TIP The buzzer sound is heard once.

3-3 Selecting the observation method

Engage the mirror according to the observation method to set the observation light path.

BF: Reflected light brightfield observation (ND filter can be built-in.)

TIP This position is also used for the reflected light brightfield/ darkfield simultaneous observation, reflected light differential interference contrast observation and reflected light simple polarization observation.

DF: Reflected light darkfield observation

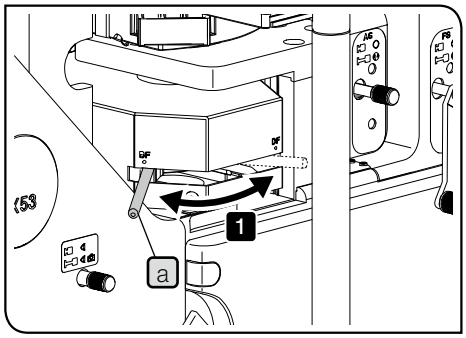

1 Slide the BF/DF selection lever a to select the observation method. Slide the lever so that it comes to the click position.

NOTE **If you observe the image by changing between the brightfield (BF) observation and the darkfield (DF) observation frequently, be sure to insert the ND filter provided with microscope frame on BF side in order to reduce the brightness when changed from DF observation to BF observation. For attaching procedures, see "Attaching the ND filter for darkfield observation" on page 77.**

3-4 Selecting between the eyepiece light path and the camera light path

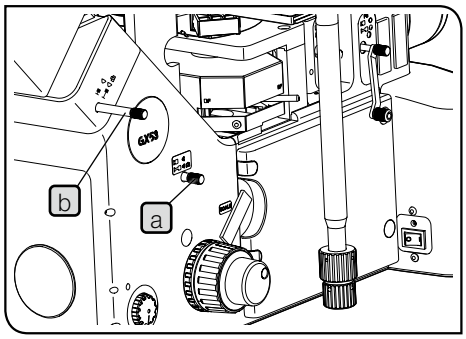

1 Slide the eyepiece/camera light path selection knob a on the microscope frame to select the required light path.

Knob on frame a	Eyepiece light path	Camera light path
	100%	0
	20%	80%

Selecting the light path when using the side port unit GX-SPU

Knob position		Eyepiece light path	GX-SPU Camera Light path	Frame Camera light path
Knob on frame a	Knob on GX-SPU b			
		100%	0	0
		50%	50%	0
		20%	0	80%
		10%	10%	80%

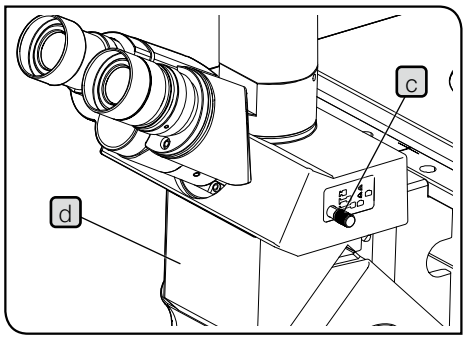

Selecting the light path when using the trinocular tube U-TR30H-2

The trinocular tube U-TR30H-2 can be attached through the intermediate attachment IX-ATU d.

Knob position		Eyepiece light path	U-TR30H-2 Camera light path	Frame Camera light path
Knob on frame a	Knob on U-TR30H-2 c			
		100%	0	0
		20%	80%	0
		0	100%	0
		20%	0	80%
		4%	16%	80%
		0	20%	80%

3-5 Placing a sample

1 Placing a sample

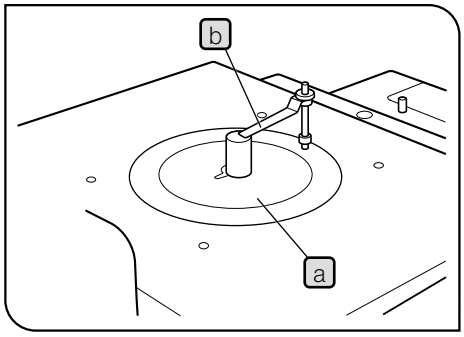

1. Select the stage center plate a according to the sample size and place it on the hole at the center of the stage.
2. Place the sample on the stage center plate gently with the sample surface to be observed facing down.

   When using the stage center plate GX-CP, hold down the sample using the specimen holder b by applying the appropriate weight, if necessary.

NOTE
- **Do not press the specimen holder toward the stage center plate with excess force. The stage center place may be deformed.**
- **If the sample heavier than 1 kg is placed, the stage center plate may be deformed or the operability of the stage knobs may be deteriorated.**

TIP
If you remove the stage center plate when using the stage GX-SVR, the sample with the maximum weight of approx. 5 kg can be placed on the stage. In this case, be sure to install the microscope on a sturdy desk.
In the environment susceptible to external vibration, it is recommended to use the portable anti-vibration table.

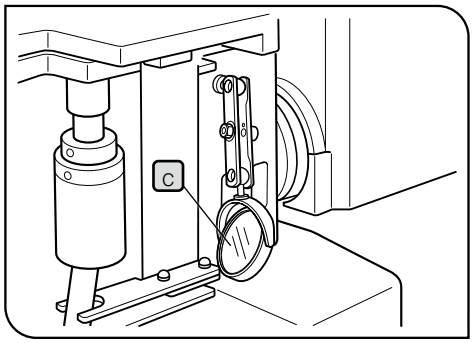

Observation position check mirror

Adjust the observation position check mirror c so that the illuminated area of the sample is visible from near the binocular section.

TIP
If a 20X or higher objective is used, the working distance becomes short and the illuminated area of the sample is less visible.

2 Moving the sample

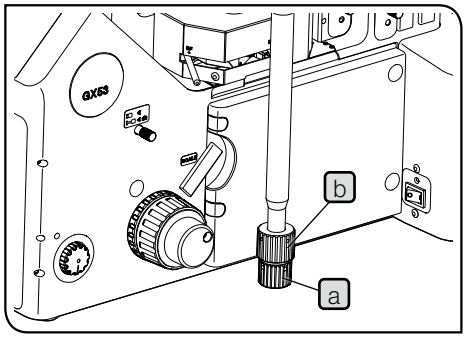

NOTE
- **Be careful, if you rotate the stage knob forcibly exceeding the stage movable range, the stage may be damaged.**
- **The objective may interfere with the stage depending on the focusing position. Be careful when you operate it.**

1. Rotate the X-axis knob a to move the sample in X-axis direction (right and left) and rotate the Y-axis knob b to move the sample in Y-axis direction (front and back).

3-6 Selecting the objective

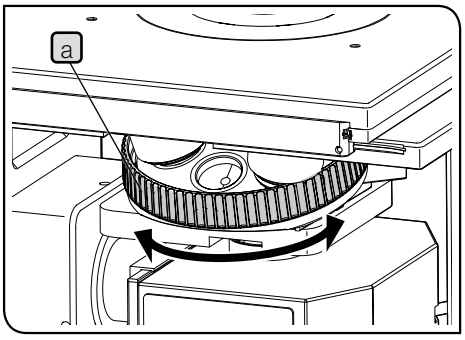

NOTE **Be careful, when selecting the objective, it may collide with the stage depending on the focusing position.**

1 Rotate the revolving nosepiece a to select the objective so that the desired objective comes to the position under the sample.

TIP For procedures to attach and remove the objective, see "6-2 Replacing the objective" on page 47.

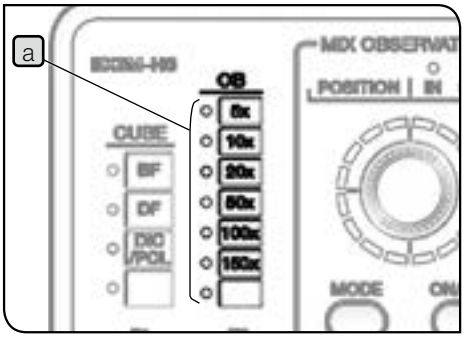

When the coded revolving nosepiece and the hand switch are combined

The lighting of the OB indicator a of the hand switch (BX3M-HS) changes according to the selection of the objective.

NOTE **To display the magnification of the objective on the hand switch (BX3M-HS), the rely unit for coded revolving nosepiece (GX-IFRES) must be attached. For connection procedures, see "Attaching the relay unit for coded revolving nosepiece (GX-IFRES)" on page 69.**

3-7 Focusing

1 Focusing

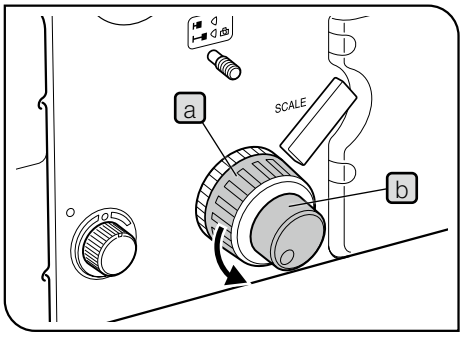

1. Rotate the coarse focusing knob a in arrow direction to move the objective to the sample as close as possible.
2. While observing the sample through the eyepieces, slowly rotate the coarse focusing knob a in the direction opposite to the arrow direction to lower the stage.
3. When the sample comes into view, rotate the fine focusing knob b to bring the sample into focus precisely.

2 Removing the fine focusing knob

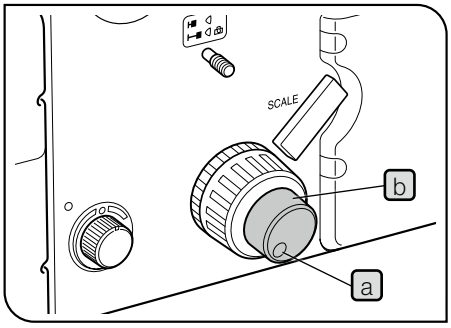

The fine focusing knobs are attached on both sides as a factory default.

NOTE **The fine focusing knob is detachable to prevent your hand from contacting the fine focusing knob when operating X-axis knob and Y-axis knob.**

1. Loosen the clamping screw a using the Allen screwdriver to remove the fine focusing knob b.

3 Adjusting the tension of the coarse focusing knob

The tension of the coarse focusing knob can be changed if necessary.

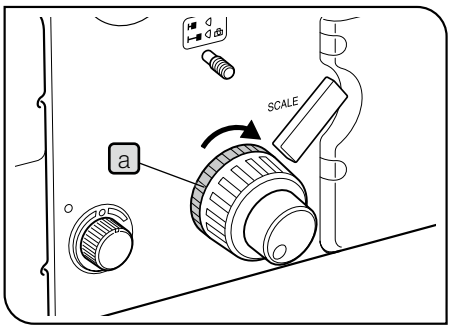

NOTE **Be sure to use the course focusing tension adjustment ring a to adjust the tension of the coarse focusing knob. Its tension is adjusted to tight as a factory default in order to secure the pad for protecting the focusing unit.**

1. Rotating the coarse focusing tension adjustment ring a in the arrow direction increases the tension and in the opposite direction decreases the tension.

TIP If the objective descends by its own weight or the focus obtained with the fine focusing knob is lost soon, the coarse focusing tension adjustment ring is set too loose.
In this case, rotate the coarse focusing tension adjustment ring a in the arrow direction to increase the tension.

3-8 Adjusting the brightness

1 When the reflected LED light source is combined

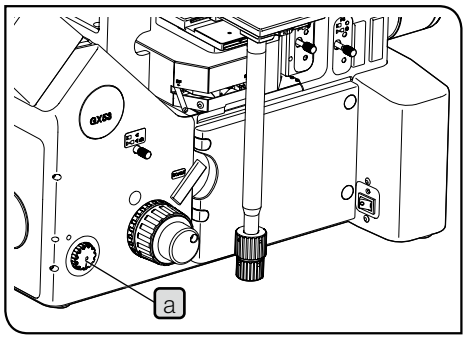

Rotate the brightness control knob a of the microscope frame clockwise to increase the brightness of the illumination.

2 When the halogen lamp housing is combined

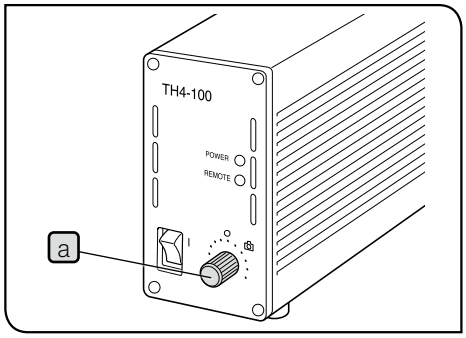

Rotate the brightness control knob a of the power supply for halogen bulb (TH4-100/TH4-200) to MAX (high voltage side) to increase the brightness of the illumination.

For details of the power supply for halogen bulb (TH4-100/TH4-200), refer to the instruction manual provided with the unit.

3 When the mercury lamp housing is combined

Engage the ND filter in the light path and adjust the transmittance of the illumination light.
For details, see “3-12 Using the filter sliders” on page 28.

4 When the light source is combined

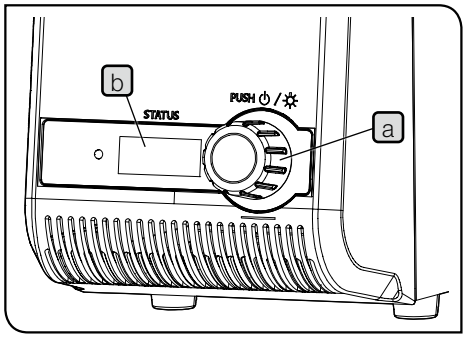

Rotate the light intensity adjustment dial a to adjust the light intensity.

TIP
- Rotating the light intensity adjustment dial a allows you to change the numerical characters (Min: 010, Max: 100) on the counter b in increments of 5.
- The larger the numerical characters on the counter b become, the brighter the lamp becomes.

For details of the LED and LDP light source (U-LGPS), refer to the instruction manual provided with the unit.

3-9 Adjusting the observation tube

1 Adjusting the interpupillary distance

The adjustment of the interpupillary distance is to adjust the distance between two eyepieces to fit to the distance between your two eyes. By doing so, you can see the single microscope image so that the fatigue of your eyes during observation can be reduced.

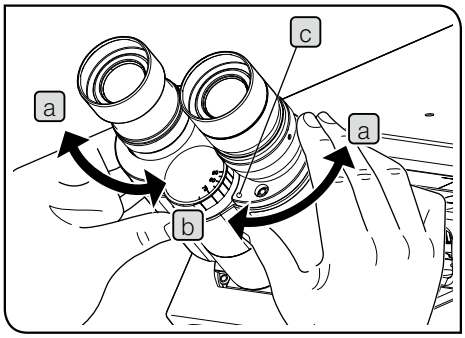

1. Align the right and left eyepieces horizontally.
2. While looking through the eyepieces, move the binocular section either in a or b direction until the right and left fields of view coincide completely. The value shown by the index c on binocular section represents your interpupillary distance.

TIP Note your interpupillary distance so that you can adjust it easily next time.

2 Adjusting the diopter

The adjustment of the diopter is to correct the difference in the diopter by each observer.

When the eyepiece is not equipped with the eyepiece micrometer

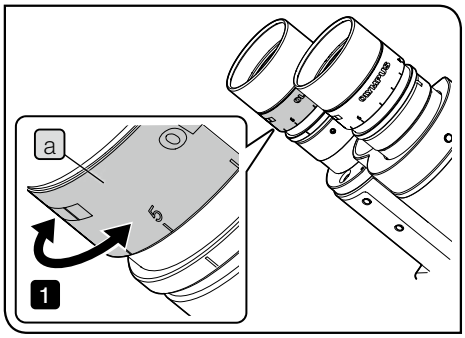

1. While pressing the observation tube, rotate the diopter adjustment ring a to set the index to "0". Perform this operation for right and left eyepieces.
2. Adjust the interpupillary distance.
3. Place the sample.
4. Engage the 10X objective in the light path and rotate the coarse focusing knob and fine focusing knob to bring the sample into focus.
5. Change to the 40X objective or higher and rotate the coarse focusing knob and fine focusing knob to bring the sample into focus.
6. Change to the 10X objective. While looking into the left eyepiece with your left eye, rotate the diopter adjustment ring a to bring the sample into focus. In the same manner, while looking into the right eyepiece with your right eye, rotate the diopter adjustment ring to bring the sample into focus.
7. Change to the 40X objective or higher again and rotate the coarse focusing knob and fine focusing knob to bring the sample into focus.
8. Change to the 10X objective, and while looking through the right and left eyepieces, make sure that the sample is in focus.
9. If the sample is not in focus, repeat from 6 to 8 again.

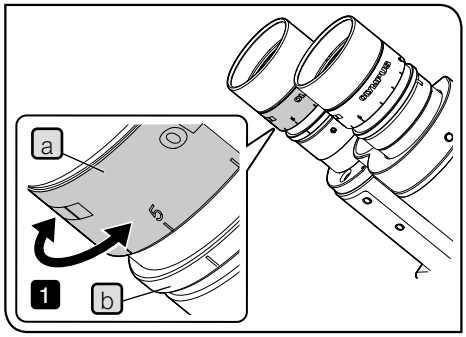

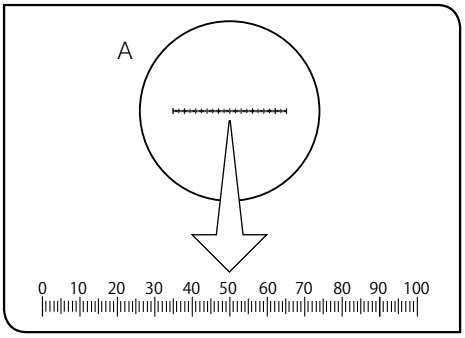

When the eyepiece is equipped with the eyepiece micrometer

1. While looking through the eyepiece equipped with the eyepiece micrometer, rotate the diopter adjustment ring a to adjust so that the scales or lines (A in the picture on the left) of the eyepiece micrometer in the field of view are clearly visible. When you rotate the diopter adjustment ring a, keep pressing the lower part b of the eyepiece.
2. Place the sample.
3. Engage the 10X objective in the light path. While looking into the eyepiece equipped with the eyepiece micrometer, rotate the coarse focusing knob and fine focusing knob to bring the sample into focus.
4. While looking through the eyepiece which is not equipped with the eyepiece micrometer, rotate the diopter adjustment ring a to bring the sample into focus.

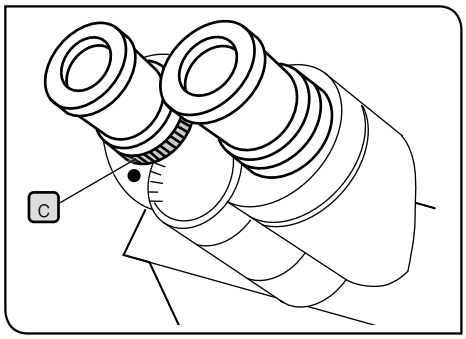

When the observation tube is equipped with the interpupillary distance adjustment ring c

Perform the same operation as described above.
Be sure to use the interpupillary distance adjustment ring c of the observation tube instead of the diopter adjustment ring of the eyepiece described above.

3 Using the eye shades

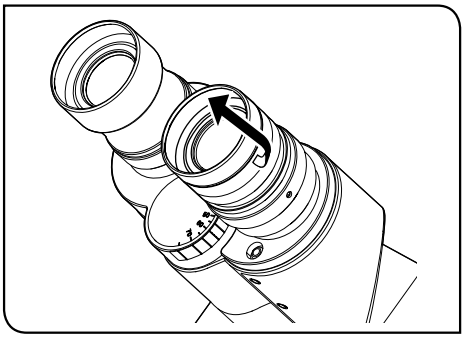

When wearing eyeglasses

Use the eye shades in the folded-down position.

When not wearing eyeglasses

Raising the folded-down eyeshades in the arrow direction prevents the unnecessary light from entering between eyepieces and eyes.

4 Adjusting the tilting (U-TBI90 only)

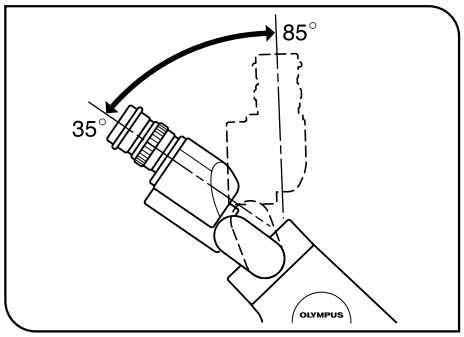

You can adjust the observation tube to the easy-to-see height and angle so that you can observe with a comfortable posture.

1 Hold the binocular section with both hands and move it up and down to set to the desired position.

NOTE **Be careful, if you apply excessive force to the binocular section from the upper or lower limit stop position, the observation tube may be damaged.**

3-10 Adjusting the aperture diaphragm (AS)

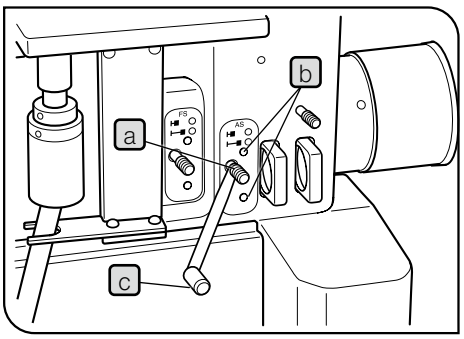

1. Slide the BF/DF selection lever to set to the BF side.
2. Rotate the revolving nosepiece to engage the 10X objective in the light path and bring the sample into focus approximately.
3. If you remove the eyepieces and look into the observation tube, you can see the aperture diaphragm image. Pull the aperture diaphragm lever a to adjust so that the aperture diaphragm image becomes approximately 70% of the diameter of the pupil of the objective (as shown in the picture on the left).

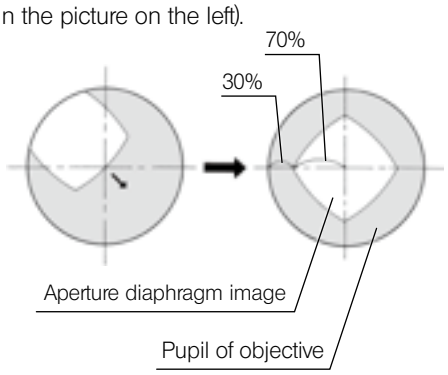

TIP
- If the center of the aperture diaphragm is deviated from the center of field, insert the Allen screwdriver into both AS centering screws b (2 positions) and rotate them to adjust it to come to the center of the field of view.
- Attaching the AS extension lever c provided with microscope frame allows you to operate AS easily.

4. Return the eyepieces back to the observation tube. While looking at the observed image, rotate the aperture diaphragm ring and fine-adjust it to obtain the desired image.

NOTE **In case of reflected light darkfield observation, push in the aperture diaphragm lever a to fully open the aperture diaphragm. If the aperture diaphragm is not fully opened, the observed image becomes dark and the darkfield observation may not be available.**

TIP Depending on samples to be observed, you can obtain the image with high contrast and few flare by slightly narrowing down the aperture diaphragm in some cases.

3-11 Adjusting the field diaphragm (FS)

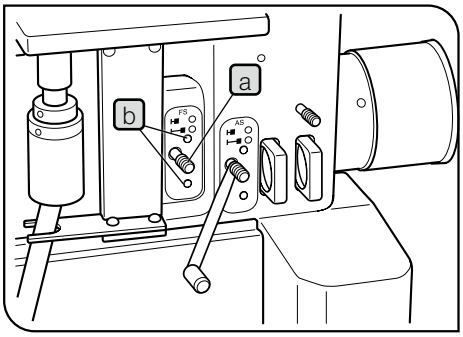

1 Slide the BF/DF selection lever to set to the BF side.

2 Rotate the revolving nosepiece to engage the 10X objective in the light path and place the sample on the stage to bring it into focus approximately.

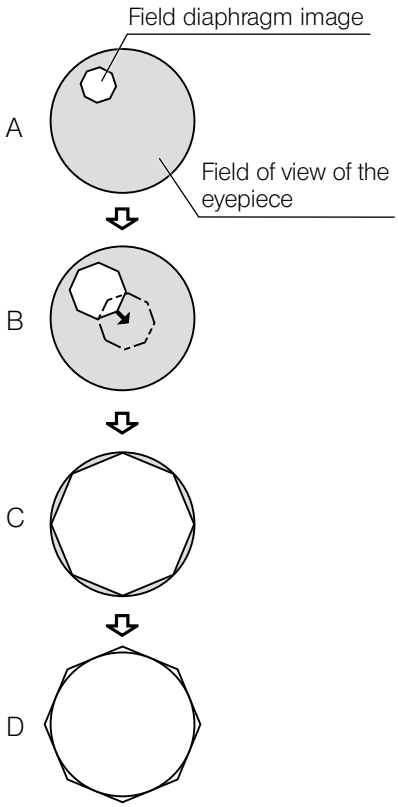

3 Pull the field diaphragm lever a to narrow down the field diaphragm to within the field of view. (Picture A)

4 Insert the Allen screwdriver into the FS centering screws b (2 pcs.) and rotate each to adjust so that the field diaphragm image comes to the center of the field. (Picture B)

5 While pushing in the field diaphragm lever a, open the field diaphragm gradually until the field diaphragm image is inscribed in the field of view. (Picture C)
If the center of the field diaphragm image is deviated, perform the centering again.

6 Open the field diaphragm until the field diaphragm image becomes almost the same size (circumscribed) as the field of view. (Picture D)

NOTE **In case of reflected light darkfield observation, push in the field diaphragm lever a to fully open the field diaphragm. If the field diaphragm is not fully opened, the observed image becomes dark and the darkfield observation may not be available..**

3-12 Using the filter sliders

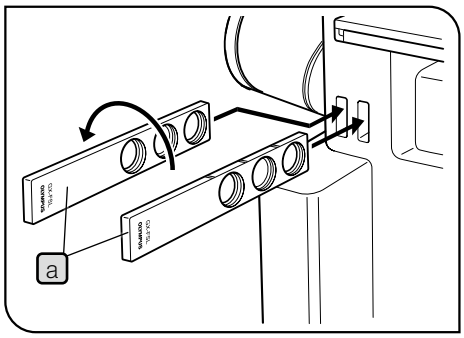

1 Engage the filter mounted on the filter sliders and GX-FSL a in the light path from the left side.

TIP The filter slider can also be inserted from the right side, but the filter slider does not stop at the first click position.

NOTE
- **Make sure that the filter display surface is visible from the front. If the filter is inserted in the direction where its display surface is not visible, the filter may be cracked.**
- **If using the filters by engaging two filter sliders in the light path, turn one of the filter sliders upside down.Mounting filters in tilted in the diffferent direction prevents the flare.**

Filter to use	Filter slider	Filter for GX-FSL or U-25*	Purpose
Color temperature conversion filter	U-25LBD	25LBD	Converts the illumination light of the halogen bulb to the daylight color.
	U-25LBA	25LBA	Converts the illumination light of LED to the illumination color of the halogen bulb.
Green filter	U-25IF550	25IF550	Increases the contrast of the observed image.
Yellow filter	U-25Y48		Contrast filter for semiconductor wafer observation
Light intensity adjustment filter	U-25ND6/ U-25ND25/ U-25ND50	25ND6/ 25ND25	Adjusts the brightness of the light source. (Transmittance: 6%/25%/50%)
Frost filter	U-25FR	25FR	The light intensity decreases, but the illumination without unevenness can be obtained.
UV cut filter	U-25L42		Cuts the ultraviolet ray to prevent the tarnish on the polarizer caused by the mercury lamp housing.
Light shielding plate		Light shielding plate (Ø25) [Provided with microscope frame]	Used as a shutter to interrupt the observation for a short time when using mercury lamp housing.

*GX-FSL and U-25 are available in combination with arbitrary filters.

3-13 Observing the image using the mercury burner

1 Turning ON the power supply for mercury burner

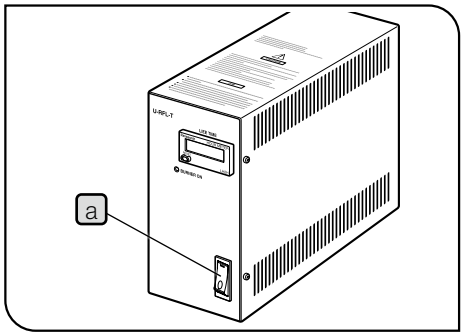

1 Set the main switch a to I (ON). For details, refer to the instruction manual provided with the unit.

2 Adjusting the brightness

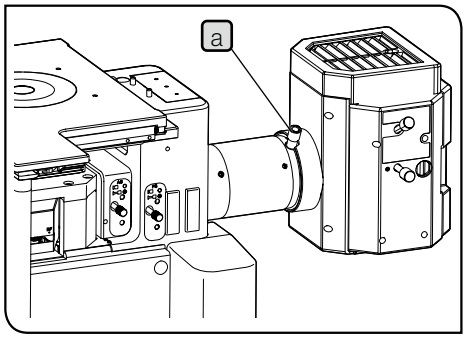

1 Slide the BF/DF selection lever to set to the BF side.

2 Bring the sample into focus.

3 Adjust the collector lens focusing knob a to make the entire field of view brightest evenly. If the brightness is uneven, perform the centering according to “Centering the mercury burner” on page 52

TIP If the collector lens focusing knob is positioned far from you and it is difficult to use it, insert the extension handle U-CLA into the knob.

3 Inserting the ND filter

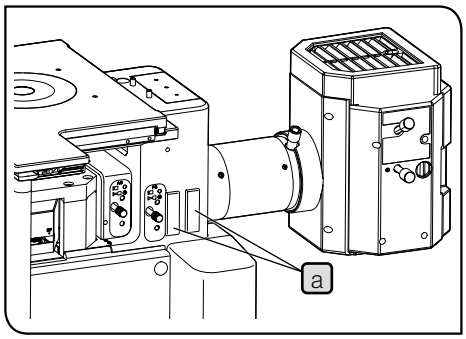

If the observation light is too bright, insert the ND filter in the filter slider insertion slots (2 positions) a to reduce the light.

For details, see “3-12 Using the filter sliders” on page 28.

⚠CAUTION **If the mercury burner is kept turned ON for long hours with the filters inserted, the filter and its metal frame will be heated. Be careful not to burn yourself.**
Do not leave the filter for a long time at locations other than the click position.

4 Various observation methods

4-1 Reflected light differential interference contrast (DIC) observation

For the DIC (Differential Interference Contrast) observation, following units are required.

- Analyzer: GX-AN360 or GX-AN
- Polarizer: GX-PO or GX-POTP (PO surface)
- DIC slider: U-DICR (standard), U-DICRH* or U-DICRHC

  * When using the DIC slider U-DICRH to perform the sensitive color observation, combine the polarizer GX-POTP.
- Revolving nosepiece (equipped with the DIC slider insertion slot): U-D5BDRE, U-D5BDREM or U-D6REM

NOTE
- **The performance of the polarizer may be deteriorated if it is exposed to the light for a long period (approx. 2,000 hours continuously). If this happens, replace the polarizer.**
- **When using the mercury lamp housing, be sure to use the U-25L42 filter to prevent the polarizer from tarnish.**

	Operation part	Page
Set the main switch to I (ON).	Main switch	P.16
Select the brightfield (BF) observation.	BF/DF selection lever	P.17
Select the observation light path.	Eyepiece/camera light path selection knob (Light path selection knob on trinocular tube or Observation/SP selection knob on the side port)	P.18
Place a sample on the stage.	Stage plate	P.19
	X-axis/Y-axis knobs	P.19
Engage the 10X objective in the light path.	Revolving nosepiece	P.20
Bring the sample into focus.	Coarse/Fine focusing knobs	P.21
Set the analyzer and the polarizer.	Analyzer insertion slot	P.35
	Polarizer insertion slot	P.35
Set the DIC slider.	DIC slider insertion slot	P.36
Adjust the brightness.	Brightness control knob	P.22
Adjust the interpupillary distance. Adjust the diopter.	Interpupillary distance adjustment scale	P.23
	Diopter adjustment ring	P.23
Engage the objective with the magnification to be used in the light path and bring the sample into focus.	Revolving nosepiece	P.20
	Coarse/Fine focusing knobs	P.21
Adjust the aperture diaphragm and the field diaphragm.	Aperture diaphragm lever	P.26
	Field diaphragm lever	P.27
Adjust the brightness.	Brightness control knob	P.22
Adjust the prism of the DIC slider.	DIC slider	P.37
Observation		

4-2 Reflected light simple polarization observation

NOTE **When performing the sensitive color observation, combine the polarizer (GX-POTP).**

	Operation part	Page
Set the main switch to ▌(ON).	Main switch	P.16
Select the brightfield (BF) observation.	BF/DF selection lever	P.17
Select the observation light path.	Eyepiece/camera light path selection knob [Light path selection knob on trinocular tube or Observation/SP selection knob on the side port]	P.18
Place a sample on the stage.	Stage plate X-axis/Y-axis knobs	P.19 P.19
Engage the 10X objective in the light path.	Revolving nosepiece	P.20
Bring the sample into focus.	Coarse/Fine focusing knobs	P.21
Set the analyzer and the polarizer.	Analyzer insertion slot Polarizer insertion slot	P.35 P.35
Adjust the brightness.	Brightness control knob	P.22
Adjust the interpupillary distance. Adjust the diopter.	Interpupillary distance adjustment scale Diopter adjustment ring	P.23 P.23
Engage the objective with the magnification to be used in the light path and bring the sample into focus.	Revolving nosepiece Coarse/Fine focusing knobs	P.20 P.21
Adjust the aperture diaphragm and the field diaphragm.	Aperture diaphragm lever Field diaphragm lever	P.26 P.27
Adjust the brightness.	Brightness control knob	P.22
Observation		

4-3 Reflected light brightfield/darkfield simultaneous observation

	Operation part	Page
Set the main switch to I (ON).	Main switch	P.16
Select the brightfield (BF) observation.	BF/DF selection lever	P.17
Remove the analyzer, polarizer or filter sliders from the light path.		
Select the observation light path.	Eyepiece/camera light path selection knob [Light path selection knob on trinocular tube or Observation/SP selection knob on the side port]	P.18
Place a sample on the stage.	Stage plate X-axis/Y-axis knobs	P.19 P.19
Engage the 10X objective in the light path.	Revolving nosepiece	P.20
Bring the sample into focus.	Coarse/Fine focusing knobs	P.21
Adjust the brightness.	Brightness control knob	P.22
Adjust the interpupillary distance. Adjust the diopter.	Interpupillary distance adjustment scale Diopter adjustment ring	P.23 P.23
Engage the objective with the magnification to be used in the light path and bring the sample into focus.	Revolving nosepiece Coarse/Fine focusing knobs	P.20 P.21
Adjust the aperture diaphragm and the field diaphragm. (Fully open the aperture diaphragm during darkfield observation.)	Aperture diaphragm lever Field diaphragm lever	P.26 P.27
Adjust the brightness.	Brightness control knob	P.22
Set the MIX slider for reflected light observation.	MIX slider for reflected light observation	P.38
Observation		

4-4 Transmitted light brightfield observation

For the transmitted light brightfield observation, following units are required.

- Transmitted illuminator column: IX2-ILL100

[LED]
- LED light source: BX3M-LEDT
- Power supply: BX3M-PSLED

[Halogen bulb]
- Halogen lamp housing: U-LH100L-3 (Extension cord U-RMT is required.)
- Power supply: TH4-100/TH4-200

NOTE **When using the stage GX-SVR, the transmitted illuminator column interferes with the stage and the stage movable range in Y direction decreases by approx. 4 mm in the rear side.**
If you remove the stage stopper rubber (rear side of stage), you can recover the movement distance by 3 mm. However, as the impact to the stage increases due to no stopper rubber, move the stage in Y-axis direction carefully.

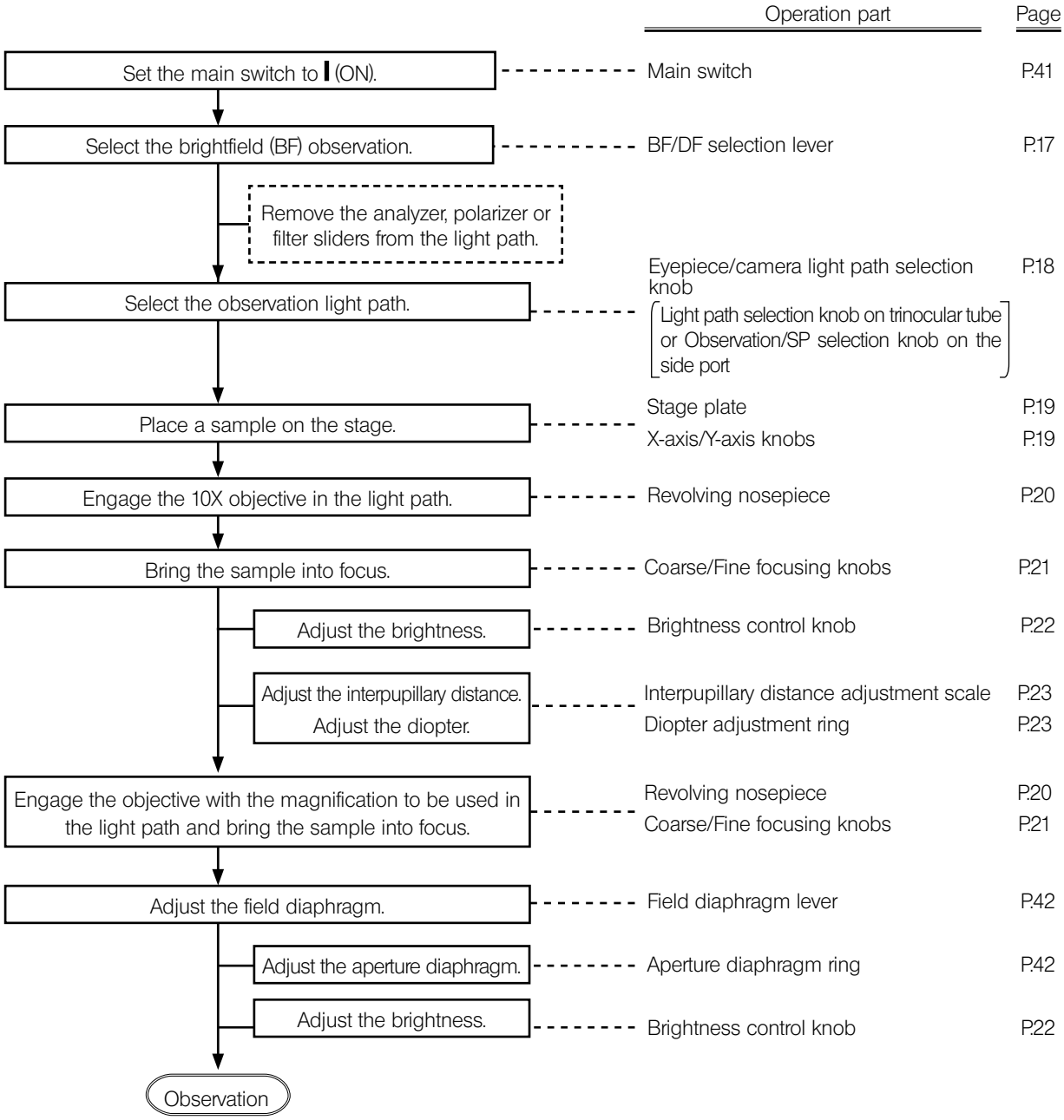

4-5 Transmitted light simple polarization observation

	Operation part	Page
Set the main switch to ▌(ON).	Main switch	P.41
Select the brightfield (BF) observation.	BF/DF selection lever	P.17
Select the observation light path.	Eyepiece/camera light path selection knob [Light path selection knob on trinocular tube or Observation/SP selection knob on the side port]	P.18
Place a sample on the stage.	Stage plate X-axis/Y-axis knobs	P.19 P.19
Engage the 10X objective in the light path.	Revolving nosepiece	P.20
Bring the sample into focus.	Coarse/Fine focusing knobs	P.21
Set the analyzer and the polarizer.	Analyzer insertion slot Polarizer insertion slot	P.35 P.35
Adjust the brightness.	Brightness control knob	P.22
Adjust the interpupillary distance. Adjust the diopter.	Interpupillary distance adjustment scale Diopter adjustment ring	P.23 P.23
Engage the objective with the magnification to be used in the light path and bring the sample into focus.	Revolving nosepiece Coarse/Fine focusing knobs	P.20 P.21
Adjust the polarizer.	Polarizer insertion slot	P.35
Adjust the aperture diaphragm and the field diaphragm.	Field diaphragm lever Aperture diaphragm ring	P.42 P.42
Adjust the brightness.	Brightness control knob	P.22
Observation		

4-6 Using the analyzer/polarizer for reflected light observation

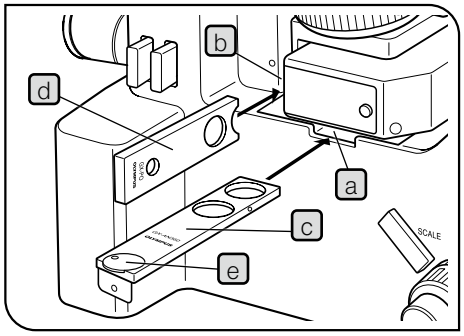

1. If the DIC slider is engaged in the light path, remove it from the light path. For details, see “Inserting the DIC slider” on page 36.
2. Engage the 10X objective or 20X objective in the light path and bring the sample into focus approximately.
3. If the cover or the dummy slider is attached to the analyzer insertion slot a or the polarizer insertion slot b, remove it.
4. Insert the analyzer GX-AN360 c into the analyzer insertion slot a.

Analyzer insertion position	light path
First level (pulled out)	Empty hole
Second level (pressed in)	Analyzer

5. Insert the polarizer GX-PO d or GX-POTP into the polarizer insertion slot b with the display surface facing to the front side.

Polarizer insertion position	Light path
First level (pulled out)	Empty hole
Second level (pressed in)	Polarizer

6. Rotate the analyzer rotation dial e to adjust the analyzer.

Observation with crossed nicols*:
Set the index of the dial to the position shown in the picture on the right.

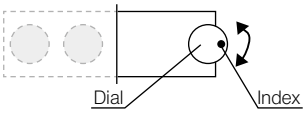

Observation without crossed nicols*:
Rotate the dial while looking at the observed image to set to the position where the desired image is visible.

* The crossed Nichols means the state that the field of view becomes the darkest.

TIP During DIC observation, the analyzer rotation dial must be set to the crossed Nichols state.

Using the connection plate

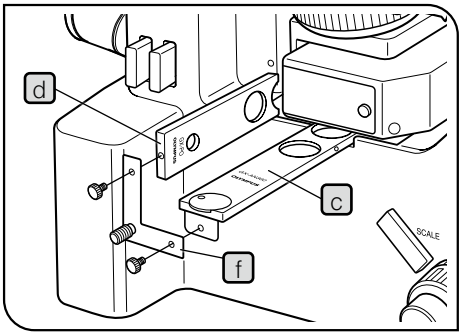

Connecting the analyzer (GX-AN360 c or GX-AN) with the polarizer (GX-PO d or GX-POTP) using the connection plate f provided with the polarizer as shown in the picture allows you to attach or detach the polarizer and the analyzer at the same time.

4-7 Using the DIC slider

1 Inserting the DIC slider

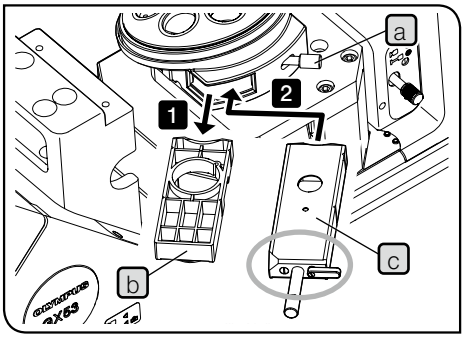

The following illustration shows the view without stage in order to show the slider insertion slot without obstacle.

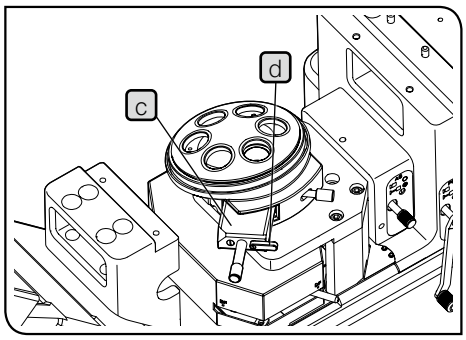

1 Loosen the mounting knob a at the rear right of the revolving nosepiece and pull out the dummy slider b.

2 Insert the DIC slider c for reflected light observation in the slider insertion slot of the revolving nosepiece with the display surface facing down, and stop inserting at the first level (when the clicking sound is heard at first).

DIC slider position	Light path
First level (pulled out)	OUT
Second level (pressed in)	IN

3 Tighten the mounting knob a to secure the slider.

4 Only with the DIC slider U-DICR, slide the selection lever d according to the objective in use.

Position of light path selection lever d	Applicable objectives	
Pressed in	UIS2	MPLFLN/MPLFLN-BD series MPLAPON series
	UIS	UMPlanFl/UMPlanFl-BD series MPlanApo20X, 100X MPlanApo100XBD
Pulled out	UIS2	LMPLFLN/LMPLFLN-BD series
	UIS	LMPlanFl/LMPlanFl-BD series LMPlanApo/LMPlanApo-BD series

For U-DICRH or U-DICRHC without selection lever, the applicable objectives are as follows.

DIC slider c	Applicable objectives	
U-DICRHC	UIS2	MPLFLN/MPLFLN-BD series MPLAPON series
	UIS	UMPlanFl/UMPlanFl-BD series MPlanFl-BD series MPlanApo20X, 100X
U-DICRHC	UIS2	LMPLFLN/LMPLFLN-BD series
	UIS	LMPlanFl/LMPlanFl-BD series LMPlanApo/LMPlanApo-BD series

2 Adjusting the prism of the DIC slider

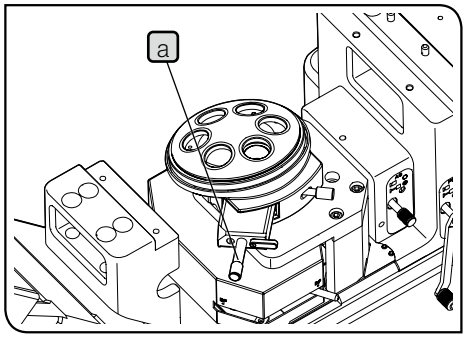

1 Rotate the prism movement knob a of the DIC slider to select the interference color with the highest contrast according to the sample.

U-DICR, U-DICRHC
The interference color of the background changes continuously from the gray sensitive color to the magenta sensitive color (from -100 to 600 nm).

U-DICRH
The interference color of the background changes continuously from -100 to 100 nm.

- If you select the gray color for the background color, you can observe the three dimensional image with high contrast in the gray sensitive color with the highest sensitivity.
- If you select the magenta sensitive color for the background color*, even a small phase difference can be viewed as a variation of the color.

  * If you want to select the magenta sensitive color for the background color, use the polarizer GX-POTP and insert it into the polarizer insertion slot so that λ mark is visible from the front.

NOTE **The detection sensitivity during DIC observation is very high. Be careful, in particular, not to attach dirt or dust on the sample surface.**

TIP
- The detection sensitivity is direction-oriented. It is recommended to use the rotational stage.
- Narrowing down the aperture diaphragm appropriately may increase the contrast in some cases.

4-8 Using the MIX slider for reflected light observation

1 Inserting the MIX slider for reflected light observation

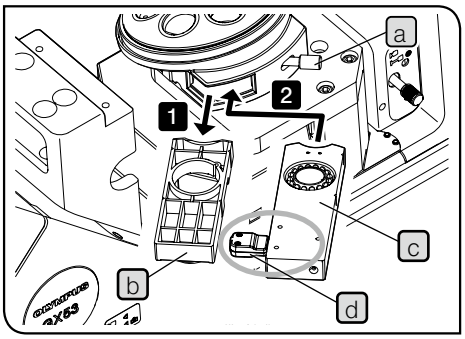

The following illustration shows the view without stage in order to show the slider insertion slot without obstacle.

1. Loosen the mounting knob a at the rear right of the revolving nosepiece and pull out the dummy slider b.
2. Insert the MIX slider for reflected light observation (U-MIXR) c into the slider insertion slot of the revolving nosepiece so that the connector d comes to the left side, and push it in the second level (position where the clicking sound is heard).

MIX slider for reflected light observation position	Light path
First level (pulled out)	OUT
Second level (pressed in)	IN

3. Tighten the mounting knob a to secure the slider.
4. Connect the connector d to the MIX slider for reflected light observation.
5. Set the main switch e of the control box (BX3M-CBFM) to ▌(ON). The buzzer sound is heard once.

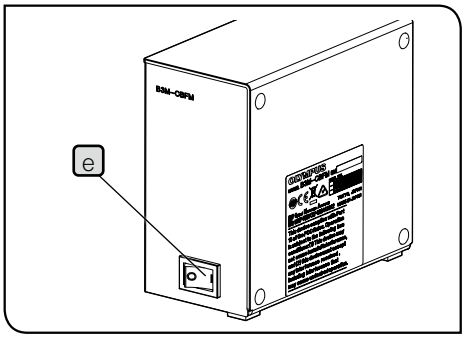

NOTE **In order to use the control box (BX3M-CBFM) with this microscope, the DIP switch must be set. For setting procedures, see page 71.**

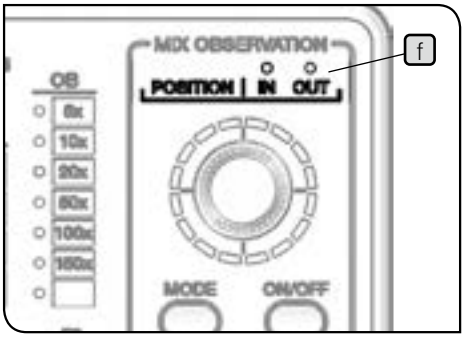

TIP You can check the state whether the MIX slider for reflected light observation is engaged in or removed from the light path by the POSITION indicator f of the hand switch (BX3M-HS).

2 Turning ON the illumination of the MIX slider for reflected light observation

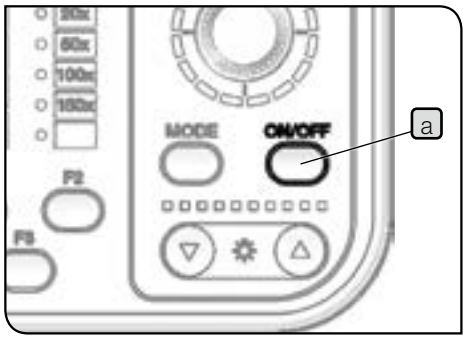

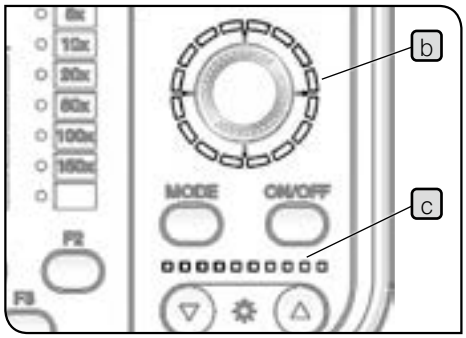

1 If you press the ON/OFF button a of the hand switch (BX3M-HS) to set it to ON, the illumination of the MIX slider for reflected light observation (U-MIXR) turns ON.

State	Indicator (b, c)	Function
ON	Turns ON.	The illumination turns ON.
OFF	Turns OFF.	The illumination turns OFF.

3 Adjusting the brightness of the illumination

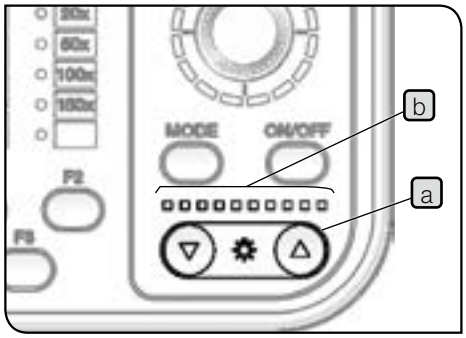

1 Press the light intensity button a of the hand switch (BX3M-HS) to adjust the brightness of the illumination.

Button	Operation	Function
▼	Short press	Darken by every predetermined quantity.
	Long press	Darken continuously.
▲	Short press	Brighten by every predetermined quantity.
	Long press	Brighten continuously.

Indicator

The light intensity state can be checked by the indicator b.

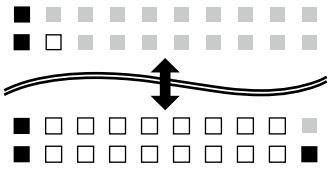

Brightness : OFF
(Light intensity value : 0%)

Brightness : Maximum
(Light intensity value : 100%)

■ : Turns ON in blue. □ : Turns ON in white. ■ : Turns OFF.

4 Selecting the illumination pattern

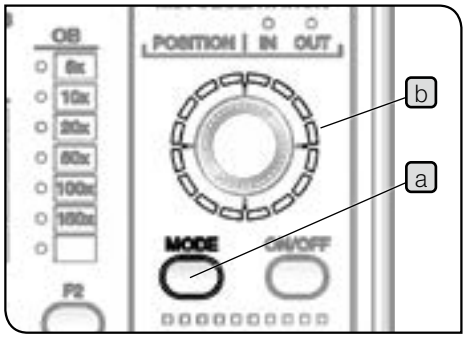

1 Press the MODE button a of the hand switch (BX3M-HS) to select the illumination pattern. The indicator b turns ON according to the illumination pattern.

Operation	Function
Short press	Changes the illumination pattern.
Long press (Short press while the illumination pattern is rotating automatically.)	The illumination pattern rotates clockwise automatically. (The automatic rotation stops.)

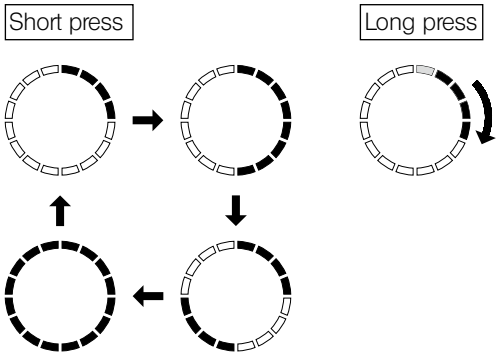

: The illumination turns ON and the indicator turns ON in blue.

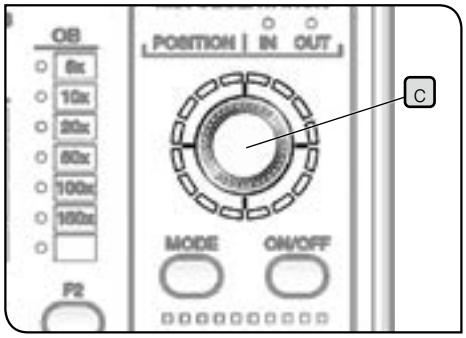

2 Rotate the dial c to change the illumination position. The illumination position moves in the rotated direction by one scale at a time.

[Example of clockwise rotation]

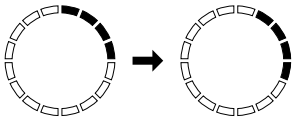

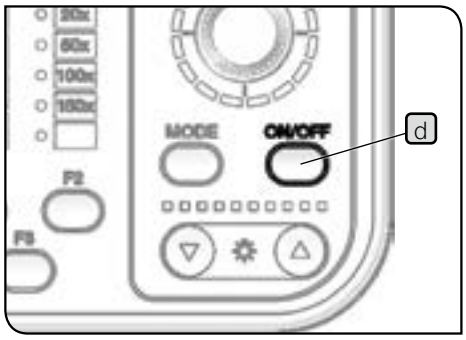

NOTE **While the illumination pattern is rotating automatically, you cannot operate the dial c and the ON/OFF button d.**

4-9 Adjusting the units for transmitted light observation

1 Centering the condenser

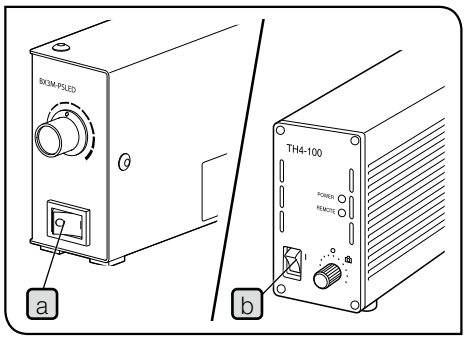

1 Set the main switch (a or b) of the reflected LED light source (BX3M-PSLED) or the power supply for halogen bulb (TH44-100/TH4-200) to **I** (ON), and rotate the brightness control knob to set the appropriate brightness.

> For details, refer to the instruction manual for the power supply (BX3M-PSLED) or (TH4-100/TH4-200).

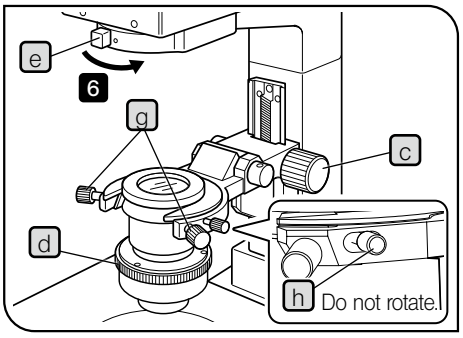

2 Rotate the condenser height adjustment knob c to lower the condenser to the lower limit.

3 Fully open the aperture diaphragm ring d (NA0.60).

4 Fully open the field diaphragm lever e (→).

5 Rotate the revolving nosepiece to engage the 10X objective in the light path and place the sample on the stage to bring it into focus approximately.

6 Rotate the field diaphragm lever e in the arrow direction to narrow down the field diaphragm to within the field of view.

7 Rotate the condenser height adjustment knob c to bring the field diaphragm image into focus. (Picture A)

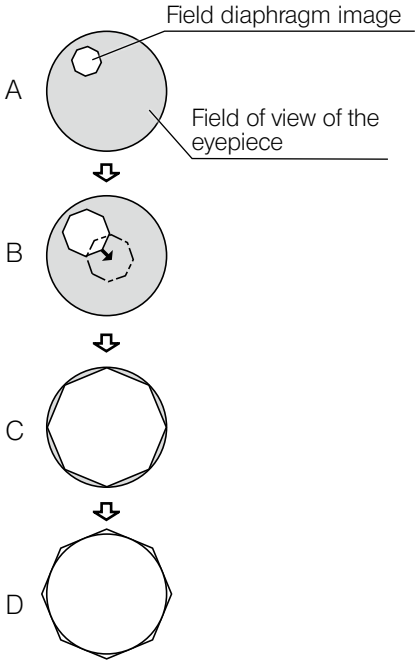

8 Rotate the centering knobs (2 positions) g to adjust the field diaphragm image so that it comes to the center of the field of view. (Picture B)

NOTE **Do not rotate the condenser clamping screw h attached to the rear of the centering knob g by mistake.**

9 Rotate the field diaphragm lever e to open the field diaphragm gradually until the field diaphragm image is inscribed in the field of view. (Picture C)
If the center of the field diaphragm image is deviated, try centering again.

10 Open the field diaphragm until the field diaphragm image becomes almost the same size (circumscribed) as the field of view. (Picture D)

TIP As NA of this condenser is from 0.05 to 0.60, if the 40X or higher-objective is used, the peripheral area of the field of view becomes dark due to insufficient NA.

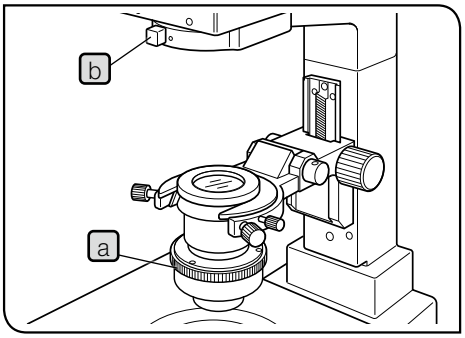

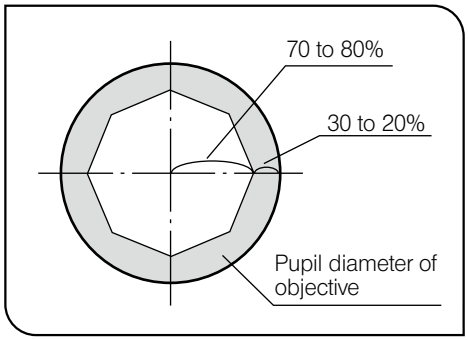

Using the aperture diaphragm (AS) for transmitted light observation

1. Rotate the aperture diaphragm ring a to set the index to 70% of the numerical aperture of the objective.
2. While looking at the observed image, rotate the aperture diaphragm ring a to fine-adjust it to obtain the desired image.

TIP To check the outer diameter of the aperture diaphragm, remove the eyepieces and look into the eyepiece sleeves to view the aperture diaphragm image with respect to that of the objective pupil. In general, it is appropriate to set the sample used with the microscope between 70% and 80% of the numerical aperture of the objective, but you can narrow down the numerical aperture furthermore as needed.

Using the field diaphragm (FS) for transmitted light observation

1. Rotate the field diaphragm lever b to adjust the field diaphragm.

	Field diaphragm ring index position				
	○				⊗
Field diaphragm	Open to maximum	←		→	Close to minimum

TIP Narrowing down the field diaphragm so that the field diaphragm image is circumscribed to the field of view depending on each objective you use will cut off the internal reflection and back light from the sample to improve the image contrast.

2 Tilting of the illumination column

When replacing large samples, it is recommended to tilt the illumination column to make a larger working space.
Even if the illumination column is tilted, the sample surface is illuminated, which is convenient for checking samples roughly or positioning the samples when placing them.

⚠CAUTION
- **When tilting the illumination column or returning it to the original position, be careful not to allow your fingers caught in the hinge.**
- **When moving or carrying the microscope, be sure to tighten the tilting clamping screw completely in advance.**

NOTE **The tilting clamping screw should normally be tightened during use. If you use the microscope while the screw is loosened, make sure that the illumination column does not accidentally fall during use.**

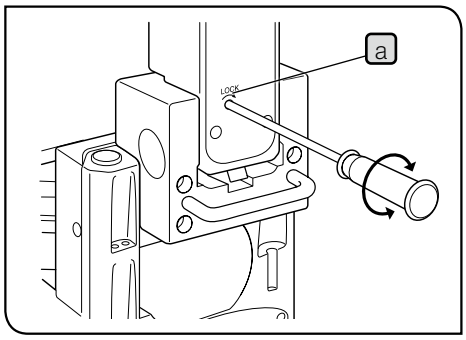

1. Rotate the tilting clamping screw a (approx. 11 turns) in the arrow direction using the Allen screwdriver to loosen it.
2. Hold the illuminator attachment's upper front side and slowly tilt the illumination column backward.

TIP If you are interrupted by vibration, be sure to support the illumination column with your hand and tilt it slowly with care.

3 Flipping up the condenser holder

When replacing the samples or attaching the objectives from the stage top surface, flip up the condenser holder to create the larger working space for easy operation.

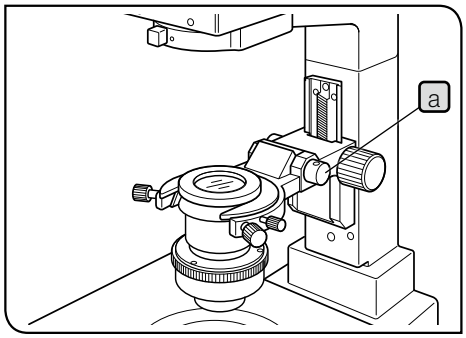

1. Place your hand at the bottom of the condenser holder and push it upward.
2. Rotate the adjustment screw a using the coin to adjust the flip-up tension.

NOTE
- **Adjust the tension so that the flipped-up condenser holder will not drop.**
- **Return the flipped-up condenser holder to its original position gently and slowly. If the condenser holder is not returned to the correct position, the optimum illumination performance cannot be obtained.**

5 Image acquisition

Attaching the camera adapter and the microscope digital camera to the trinocular tube allows you to acquire the observed image. The image acquisition range is determined by the size of the image sensor used in the camera and the magnification of the camera adapter.
For details, refer to the instruction manuals for the camera and the camera adapter.

NOTE
- **When using the camera adapter, be sure to adjust the parfocality between the camera adapter and eyepieces. Otherwise, the focusing of the image through eyepieces will not match with that of the image acquired by the camera.**
  For procedures to adjust the parfocality, refer to the instruction manual of the respective camera adapter.
- **Depending on the setup condition of the microscope, the light from fluorescent lamps, etc. may enter the eyepieces to deteriorate the observed image.**
  If that happens, cover the eyepieces with the eyepiece cap a provided with microscope frame.

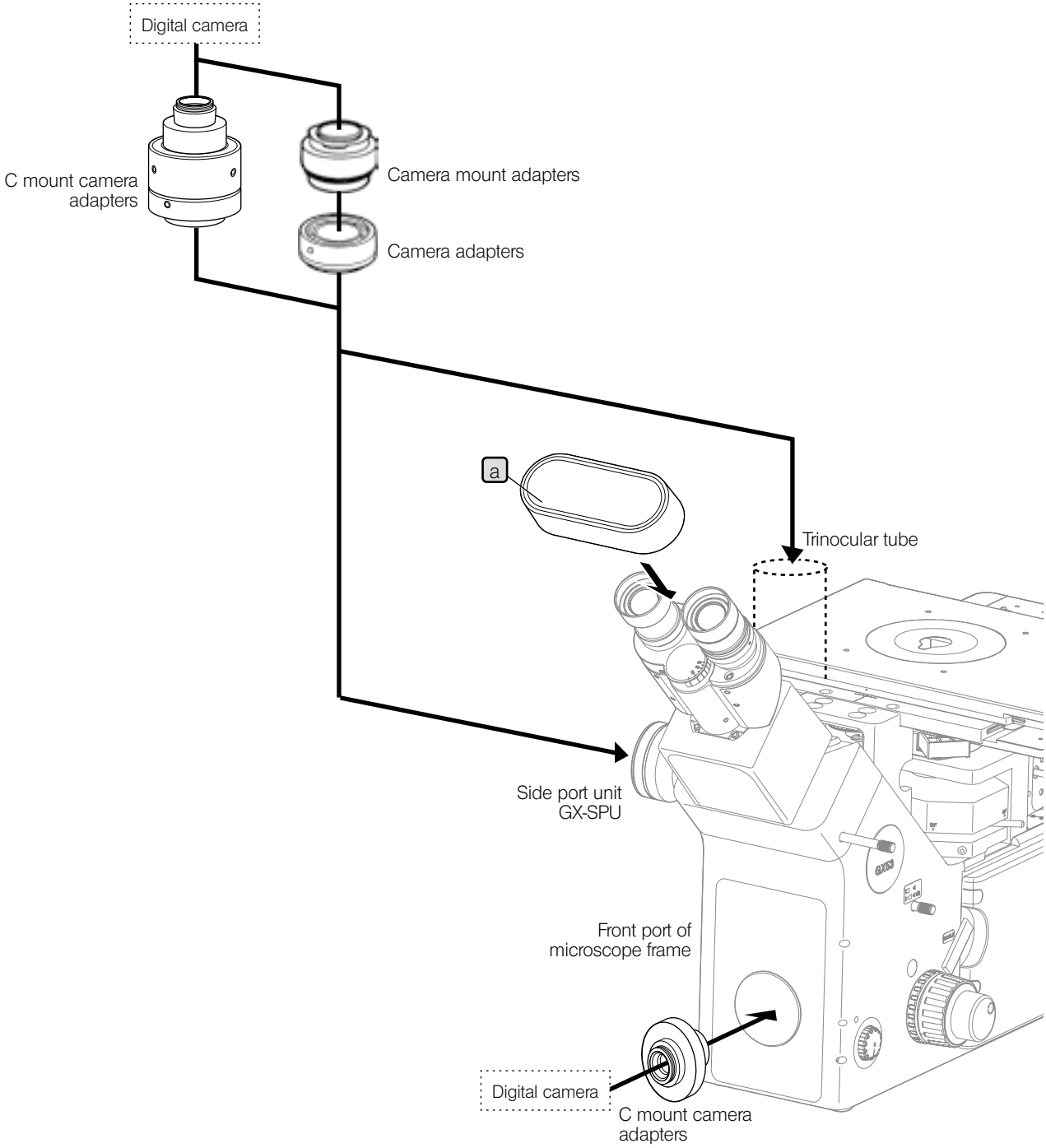

6 Replacement of optical parts

6-1 Replacing the eyepiece

1 Removing the eyepiece

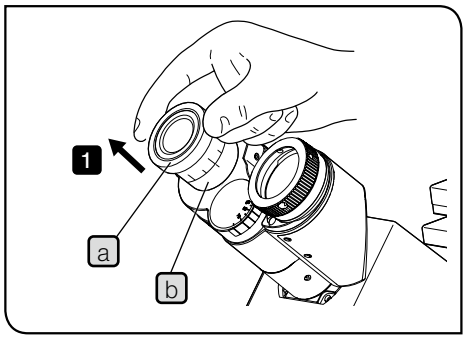

1 Pull out the eyepiece a from the eyepiece sleeve b.

2 Attaching the eyepiece micrometer

You can use the eyepiece micrometer to check the size of the observed image or the center position of the observation field of view, etc. For the eyepiece micrometer types attachable to your eyepiece, contact EVIDENT.

Attachable eyepiece micrometer
Size
Ø24 mm Thickness 1.5 mm

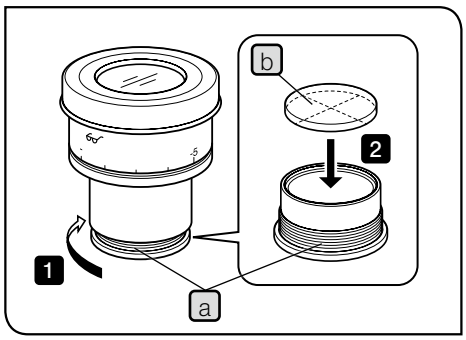

1 Hold the eyepiece frame, and rotate the built-in reticle holder a in the arrow direction to remove it.

TIP Depending on the case, the reticle holder may be tightened too firmly and it cannot be rotated. In this case, if you grab the reticle holder too firmly, it will be deformed and cannot be rotated furthermore. Grab around the reticle holder lightly with equal force to rotate it or push it to the rubber sheet placed on the desk to rotate and remove it.

2 Insert the eyepiece micrometer b in the removed reticle holder a with the display surface of the eyepiece micrometer facing down.

3 Screw in the reticle holder a to the bottom of the eyepiece.

NOTE
- **Be careful not to touch the lens with your fingers during working.**
- **Do not tighten the reticle holder with excess force.**

3 Attaching the eyepiece

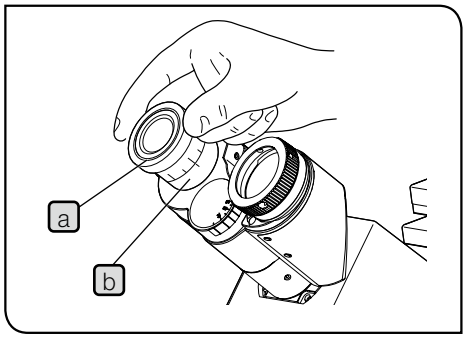

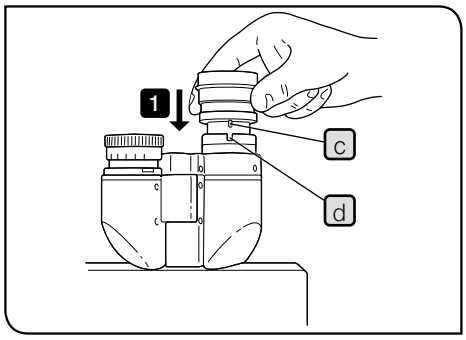

1 Insert the eyepiece a into the eyepiece sleeve b until it touches the end.

NOTE
- As the binocular tube does not have a positioning groove, an eyepiece equipped with a positioning pin cannot be used with this tube.
- When using the eyepiece equipped with the micrometer, insert the eyepiece into the right eyepiece sleeve. In this case, attach the eyepiece so that the eyepiece positioning pin c enters the groove d below the eyepiece sleeve.
- The super widefield eyepiece (SWH10-H) has a positioning pin. Attach it by inserting the positioning pin to the positioning groove of the eyepiece sleeve.

6-2 Replacing the objective

1 Removing the stage center plate

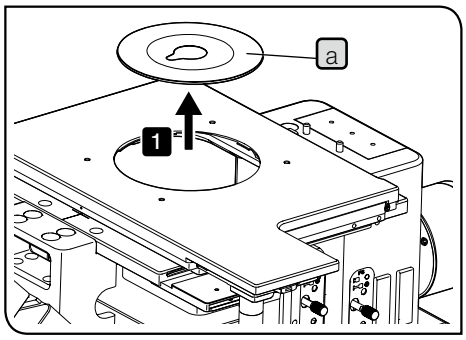

1 Remove the stage center plate a.

2 Removing and attaching the objective

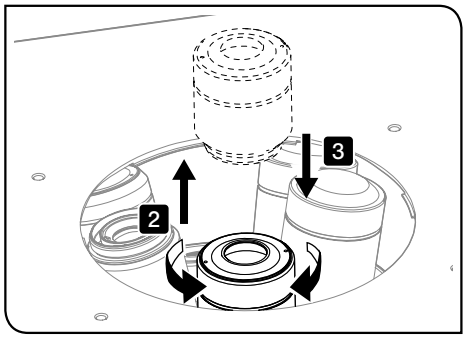

1 Rotate the coarse focusing knob to lower the revolving nosepiece mount to the lowest position to prevent the objective from colliding with the stage.

2 Rotate the objective in the arrow direction to remove the objective from the revolving nosepiece.

3 Screw the objective to be attached into the screw hole of the revolving nosepiece by rotating it in the arrow direction and secure it firmly.

Using the brightfield objective adapter

When attaching a brightfield objective to the revolving nosepiece for brightfield/darkfield observations, attach the objective through the objective adapter BD-M-AD.

3 Attaching the stage center plate

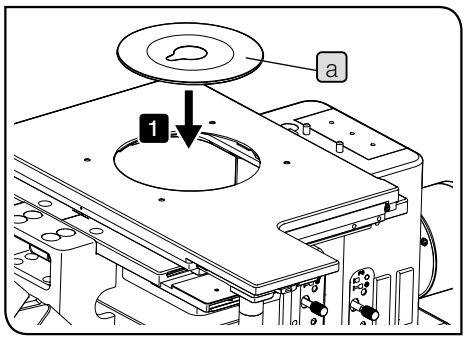

1 Fit the stage center plate a into the stage.

6-3 Replacing the halogen bulb

⚠CAUTION **The bulb, lamp housing and areas around the lamp housing are extremely hot during and right after use. When replacing the burner during observation, set the main switch to ○ (OFF) and disconnect the power cord. Wait until the bulb, the lamp housing and areas around the lamp housing are sufficiently cooled down.**

Applicable lamp	12V100WHAL-L (made by PHILIPS Co. 7724I) 12V100WHAL (made by PHILIPS Co. 7023)

1 Removing the halogen lamp housing

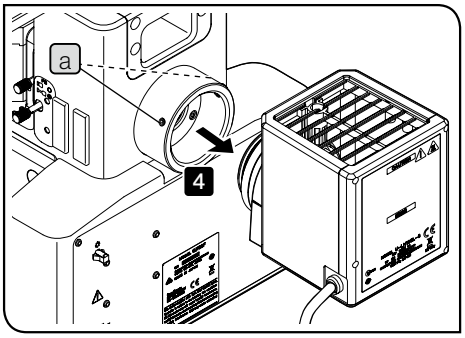

1. Set the main switch of the power supply for halogen bulb (TH4-100/TH4-200) to ○ (OFF) and disconnect the power cord.
2. Disconnect the connector of the lamp housing from the power supply (TH4-100/TH4-200).
3. Loosen the clamping screws a (2 positions) on the rear of the microscope frame using the Allen screwdriver.

NOTE **Be careful, if the clamping screw is loosened too much, it may come off.**

4. Remove the lamp housing.

For details of the power supply for halogen bulb (TH4-100/TH4-200), refer to the instruction manual provided with the unit.

2 Replacing the halogen bulb

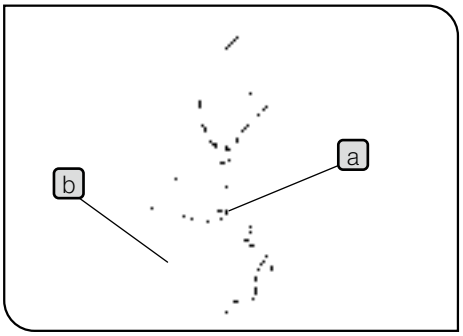

1. Loosen the clamping screw a on the top of the lamp housing using the Allen screwdriver provided with microscope frame.
2. Raise the lamp housing b up and remove it.

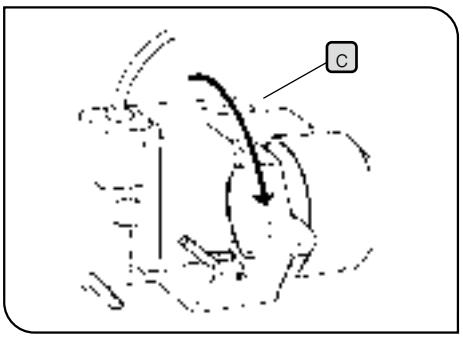

3. Tilt the lamp socket c in the arrow direction by 90°.

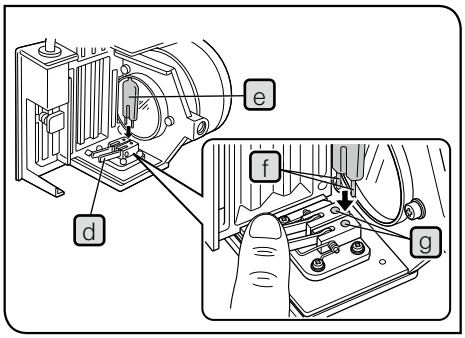

4 While pressing down the bulb fixing lever d, hold the halogen bulb e wrapped with gauze, etc. and insert the terminal f until it touches the pin position g.
Place the bulb fixing lever carefully to the original position to fix the bulb.

NOTE **Be careful not to touch the bulb directly with your hand. If fingerprints or stains are attached to the bulb, wipe it with a soft cloth, etc. to prevent the lifetime reduction or the bulb explosion. If fingerprints or stains are attached to the bulb, clean it by wiping gently with a piece of cleaning paper slightly moistened with absolute alcohol.**

5 Fit the halogen lamp housing from the above and while pressing down the clamping screw a, tighten it.

3 Attaching the halogen lamp housing

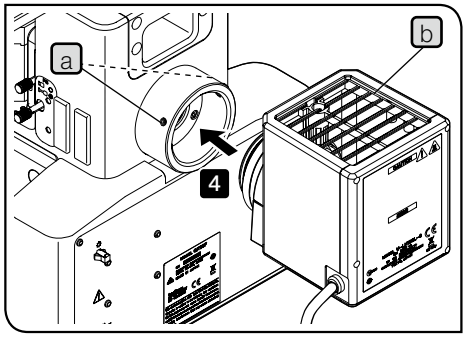

1 Loosen the clamping screws a (2 positions) on the rear of the microscope frame using the Allen screwdriver.

2 Insert the halogen lamp housing in the light source mount hole until it touches the end.

⚠CAUTION **Attach the lamp housing with the heat radiating fin b facing up, and secure he sufficient space above, below and at rear of the lamp housing. Otherwise, fire may be caused.**

3 Tighten the clamping screws using the Allen screwdriver.

NOTE **Do not tighten screws too firmly. The lamp housing mount may be deformed.**

4 Connect the cable for halogen lamp housing to the connector of the power supply (TH4-100/TH4-200). For details, see “Connecting cables” on page 74.

Applicable lamp	JCR12V100WB (made by Ushio Inc.)

1 Replacing the light guide halogen bulb for transmitted light illumination

For procedures to replace the light guide halogen bulb for transmitted light illumination, refer to the instruction manual provided with the unit.

6-4 Replacing the mercury burner

⚠CAUTION **The bulb, lamp housing and areas around the lamp housing are extremely hot during and right after use. When replacing the burner during observation, set the main switch to ○ (OFF) and disconnect the power cord. Wait until the bulb, the lamp housing and areas around the lamp housing are sufficiently cooled down.**

Applicable lamp	USH-103OL (made by Ushio Inc.)

1 Removing the mercury lamp housing

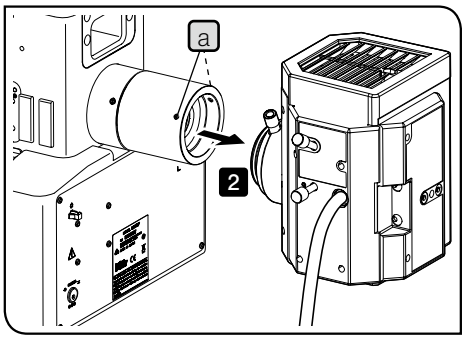

1. Set the main switch of the power supply for mercury burner (U-RFL-T) to ○OFF) and disconnect the power cord.
2. Disconnect the connector of the lamp housing from the power supply (U-RFL-T).
3. Loosen the clamping screw a of the adapter (MX-HGAD) using the Allen screwdriver provided with microscope frame.

NOTE **Be careful, if the clamping screw is loosened too much, it may come off.**

4. Remove the lamp housing.

For details of the power supply for mercury burner (U-RFL-T), refer to the instruction manual provided with the unit.

2 Replacing the mercury burner

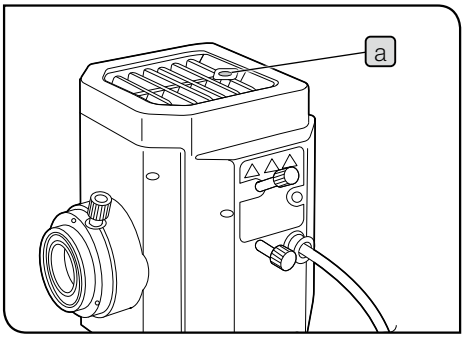

1. Loosen the clamping screw a on the top of the lamp housing using the Allen screwdriver.

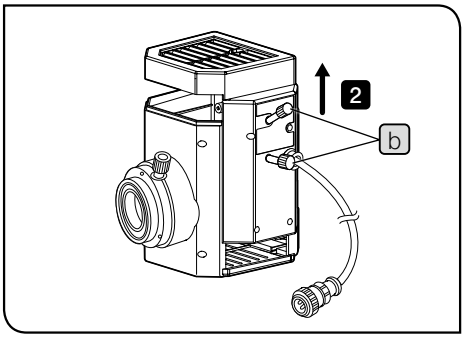

2. Hold the upper section of the lamp housing and pull it upward to remove the socket part.

NOTE **To prevent damage, do not hold the lamp housing by the centering knobs b.**

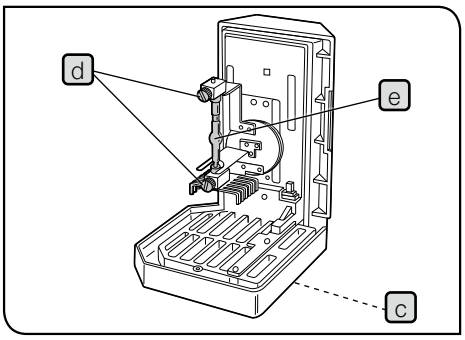

3 Place the socket part so that the heat radiating fin c faces down.

4 Loosen the burner clamping screws d (2 pcs.) of the socket part.

5 Grab the mercury burner e attached and remove the lower side from the mount first, and then remove the upper side.

TIP The socket part is attached with either one of followings:
- Dummy burner for transportation (factory default)
- Old burner (to be replaced)

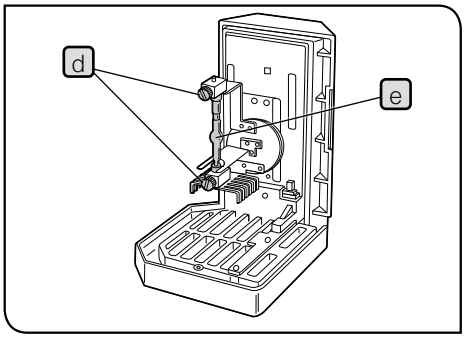

6 Hold the new mercury burner wrapped with gauze, etc. and attach the + (positive) pole of the mercury burner e to the fixed mount on the upper side, then attach the - (negative) pole to the mount on the lower side.

NOTE **Be careful not to touch the burner directly with your hand and avoid leaving fingerprints or stains on the burner. Otherwise, the burner may be exploded due to the glass distortion caused by stains. If fingerprints or stains are attached to the burner, clean it by wiping gently with a piece of cleaning paper slightly moistened with absolute alcohol.**

7 Tighten the burner clamping screws d (2 positions) of the socket part.

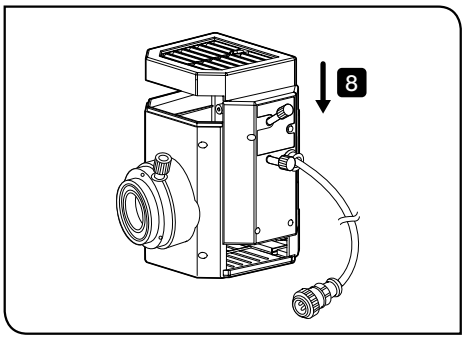

8 Align the external surfaces of the lamp housing with those on the socket part, push the lamp housing straight downward and place the socket part to the original position.

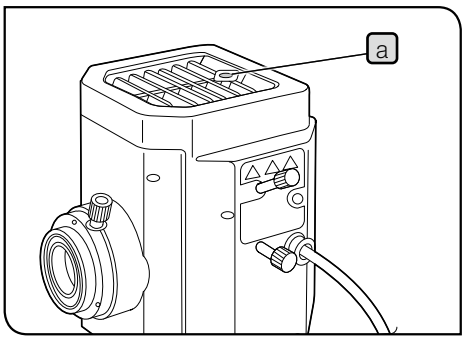

9 Tighten the clamping screw a using the Allen screwdriver.

10 Set the hour counter of the power supply for mercury burner (U-RFL-T) to “0.0”. For details, refer to the instruction manual provided with the unit.

Lamp service life

USH-103OL: 300 hours
This value is based on the cycle of turning ON for 2 hours and turning OFF for 30 minutes. Turning ON and OFF in the cycle shorter than this will seriously shorten the service life of the burner.

3 Attaching the mercury lamp housing

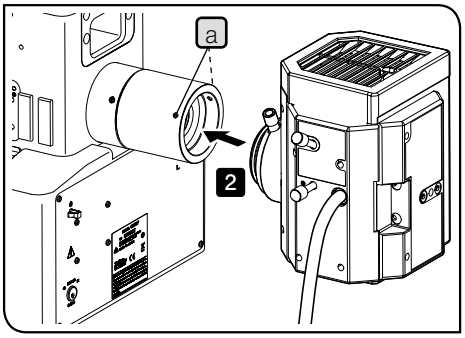

1. Loosen the clamping screws a (2 positions) of the adapter (MX-HGAD) using the Allen screwdriver.
2. Insert the mercury lamp housing in the light source mount hole until it touches the end
3. Tighten the clamping screws using the Allen screwdriver.
4. Connect the cable of the mercury lamp housing to the power supply (U-RLF-T). For details, refer to the instruction manual provided with the unit.

4 Centering the mercury burner

NOTE
- **When using the mercury lamp housing, attach the light shielding plate (shutter) provided with the microscope frame to the filter slider. For details, see "6-5 Replacing the filter" on page 54.**
- **Set the main switch of the power supply to I (ON) and wait until the arc image stabilizes (5 to 10 minutes after ignition) before centering.**

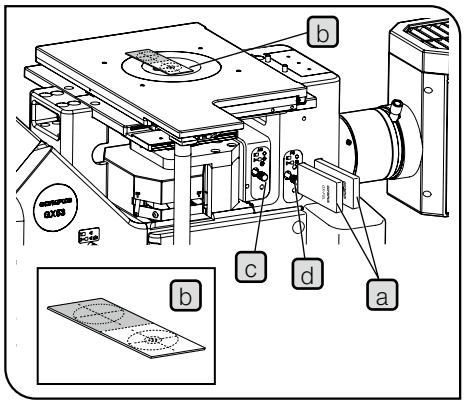

1. Set the main switch to I (ON). For details, see "3-2 Turning ON the main switch" on page 16.
2. Engage the light shielding plate of the filter slider a to block the illumination light.
3. Use the observation light path selection knob to set the BF light path.

NOTE **During centering, be sure to view images through the UV cut plate.**

4. Engage the 10X objective in the light path, place the centering target U-CST b on the stage with the cross line side facing up, and align the center of the concentric circles of the U-CST with the center of field of view.

TIP U-CST can be substituted with white paper, etc.

5. Move the stage until the crosslines are overlaid on the center of field.
6. Rotate the revolving nosepiece to engage the position without the objective (remove objective cap) in the light path.
7. Pull out the field diaphragm lever c (to narrow down the field diaphragm) and push in the aperture diaphragm lever d (to open the aperture diaphragm).
8. Slide out the filter slider a to introduce the illumination light in the light path.

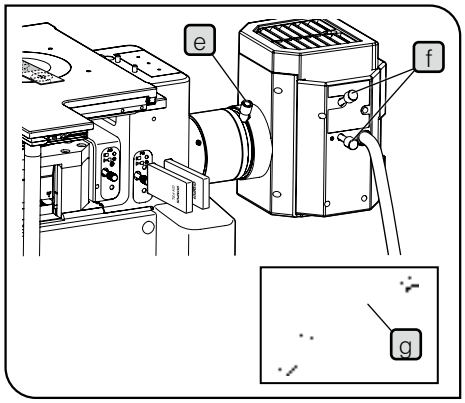

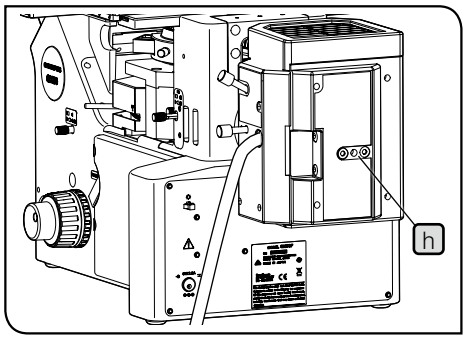

9 Rotate the collector lens focusing knob e to project the arc image on U-CST. (Picture A)
If the arc image is not projected, rotate the burner centering knob f.

TIP If it is difficult to use the collector lens focusing knob of the mercury lamp housing because it is placed at the back of the microscope, insert the extension handle (U-CLA) g in the knob and use the knob.

10 Rotate the burner centering knob f to move the arc image to the center of the right (or left) half of the field of view. (Picture B)

11 Fit the Allen screwdriver into the mirror focusing screw h on the rear of the lamp housing and rotate the screw to bring the mirror arc image into focus. (Picture C)

12 Rotate the burner-centering knob f to overlap the arc image with mirror arc image. (Picture D)
In actual observation, rotate the collector lens focusing knob e to adjust the observation field to be uniform.

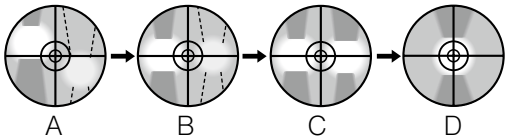

TIP The centering of the mercury burner is recommended after the burner is replaced or when the unevenness is noticed in the brightness of the observed image.

6-5 Replacing the filter

⚠CAUTION **The filters become very hot immediately after use. Make sure that the filters are cooled down sufficiently before replacing the filters.**

Attaching the arbitrary filter

The arbitrary filter of the following size can be inserted to the empty slider (U-25).

Diameter	Ø 25 mm
Thickness	2.6 mm or less

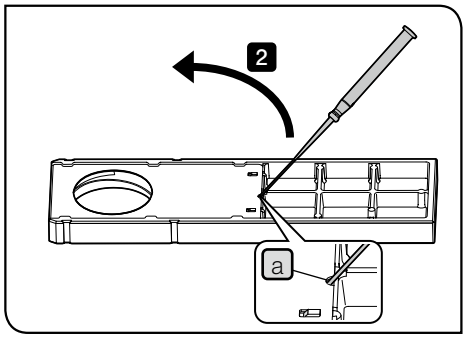

1 Set the display surface of the empty slider facing down and the surface attached with the cover facing up.

2 Insert the precision screwdriver in the notch a of the cover diagonally, and raise and slide the cover with the precision screwdriver to open the cover.

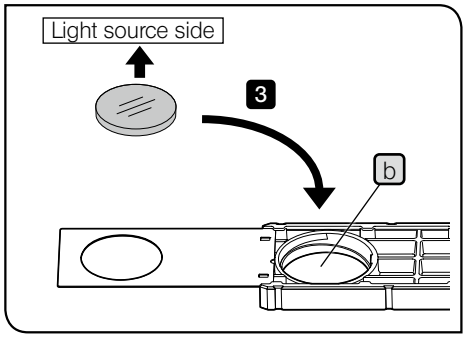

3 Insert the arbitrary filter in the filter mount hole b of the slider.

NOTE **If the orientation of the filter to use is specified, insert the filter so that the filter surface of the light source side faces up.**

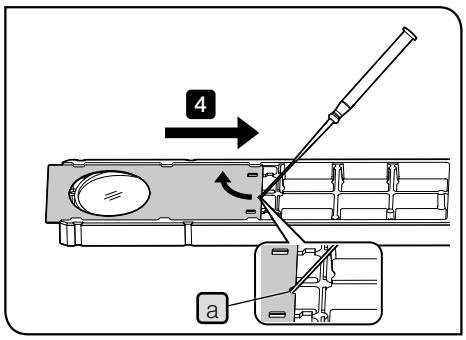

4 Insert the precision screwdriver in the notch a, and raise and slide the cover with the precision screwdriver to return the cover to the original position. At this time, slide the cover under the tabs (6 positions) c until the “clap” sound is heard.

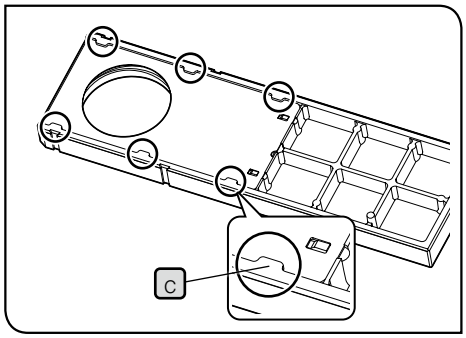

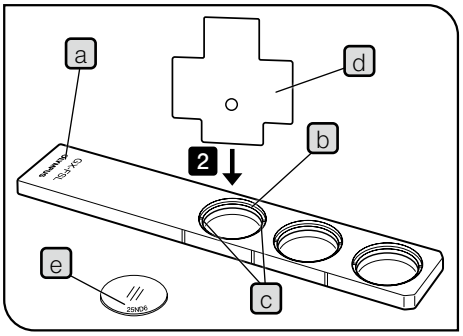

Attaching to GX-FSL

1. Place the filter slider on the desk with the display surface a of the slider facing up.
2. Insert the dedicated screwdriver d provided with the microscope frame into the notch c on the filter holding ring b and rotate the screwdriver counterclockwise to remove the filter holding ring b.
3. Insert the filters with display surfaces e of the slider facing up.
4. Screw in the holding ring b to clamp firmly.

When using two filter sliders

3. Insert the filters with display surfaces e of the slider facing down.

TIP The filter display surface e is same direction when the filter sliders are set to the microscope frame, bacause the filter slider is used upside down.

4. Screw in the holding ring b to clamp firmly.

7 Troubleshooting

If problems occur, please review the following list and take remedial action as needed.
If you cannot solve the problem after checking the entire list, please contact EVIDENT for assistance.

Problem	Cause	Remedy	Page
1. Optical systems			
a) The main switch does not turn ON.	The power cord is not connected completely.	Connect the cord completely.	74
b) The lamp turns ON and OFF.	The lamp is about to burn out.	Replace with a new lamp.	48, 50
c) The lamp does not turn ON.	The lamp is burned out.	Replace with a new lamp.	48, 50
	The lamp is not attached.	Attach the lamp.	48, 50
d) The lamp burns out quickly.	You are not using the proper lamp.	Replace with a proper lamp.	4
e) Even though the lamp turns ON, the field of view is dark.	The field diaphragm and aperture diaphragm are narrowed down.	Open the aperture diaphragm sufficiently, and also open the field diaphragm until the field diaphragm circumscribes the field of view.	26, 27
	The light path selection knob is not at the proper observation light path position.	Set it at the proper light path position.	18
	The ND filter with low transmittance is engaged in the light path.	Select the proper transmittance.	28
f) The field of view is obscured or is not evenly illuminated.	The light path selection knob is at the middle position.	Move the knob to the stop position according to the purpose.	18
	The revolving nosepiece is not set to the click position properly.	Set it to the click position properly.	20
	The lamp housing is not attached correctly.	Attach it properly.	48, 50
	The scale slider or the dummy slider is at the middle position.	Push it to the stop position completely.	80
	The eyepiece/camera light path selection knob is at the middle position.	Move the knob to the stop position according to the purpose.	18
	The field diaphragm is narrowed down too far.	Open the field diaphragm sufficiently.	27
	The field diaphragm is not centered.	Center the field diaphragm.	27
	The polarizer and the analyzer are at the middle position.	Slide them to the stop position according to the purpose.	35
	The filter slider is at the middle position.	Set it to the click position properly.	28
	The revolving nosepiece is not attached correctly.	Push it to the stop position completely and fix it.	68
	The BF/DF selection lever is at the middle position.	Set it to the click position properly.	17

Problem	Cause	Remedy	Page
g) Dust or dirt is visible in the field of view.	Dirt or dust on lamp.	Clean them completely.	8
	Dirt or dust on sample.		
	Dirt or dust on eyepieces or objective.		
	Dirt or dust on dummy slider or scale slider.		
h) The observed image glares.	The aperture diaphragm is narrowed down too far.	Adjust it properly.	26
i) The visibility of the observed image is poor. • The image is not sharp. • The contrast is poor. • Details are poorly visible.	The objective applicable to UIS2(UIS) series is not used.	Replace with the objective applicable to UIS2(UIS) series.	62
	The lamp housing is not attached properly.	Push it to the stop position completely and secure it.	48, 50
	The objective is not properly engaged in the light path.	Set it to the click position of the revolving nosepiece properly.	20
	Dirt or dust on the tip of objective.	Clean them sufficiently.	8
	Dirt or dust on sample.		
	The aperture diaphragm is not adjusted appropriately.	Narrow down the aperture diaphragm between 70% and 80% of the numerical aperture of the objective.	26
j) The one-sided blur appears in the observed image.	The lamp housing is not attached properly.	Push it to the stop position completely and secure it.	48, 50
	The objective is not properly engaged in the light path.	Set it to the click position of the revolving nosepiece properly.	20
	The stage is not mounted properly.	Attach the stage properly.	72
	The stage center plate is not attached properly.	Attach it properly.	72
	The sample on the stage is tilted.	Place the sample on the stage properly.	19
k) During DIC observation, the interference color appears, but the color is uneven.	The position of the DIC slider selection lever is not correct.	Change the position of the DIC slider selection lever according to the objective type.	36
	The objective applicable to DIC observation is not used.	Use the objective applicable to DIC observation.	36
l) The DIC effect is poor.	The sample tilt orientation is perpendicular to the orientation with best detection sensitivity.	Rotate the sample so that it is tilted in the orientation with best detection sensitivity.	19
	The analyzer is rotated to the improper position.	Rotate the analyzer to the position with best contrast.	35
	The DIC prism is attached in an inappropriate orientation.	Attach it properly.	36

Problem	Cause	Remedy	Page
2. Coarse/Fine focusing knobs			
a) The tension of the coarse focusing knob is tight.	The coarse focusing tension adjustment ring is tightened too firmly.	Loosen the coarse focusing tension adjustment ring to the appropriate tightness.	21
b) The focusing is lost during observation due to dropping of the objective on its own or slip of the fine adjustment knob.	The coarse focusing tension adjustment ring is loosened too far.	Tighten the coarse focusing tension adjustment ring to the appropriate tightness.	21
3. Light intensity knob			
a) The brightness cannot be adjusted even though the brightness control knob on the front of the microscope frame is rotated.	The AC adapter, power cord or cable for LED light source is not connected.	Set the main switch to O (OFF) and connect the AC adapter, power cord and cable for LED light source to the microscope frame.	16, 74, 76
	The microscope frame or the LED light source is damaged.	Contact EVIDENT.	-
4. Observation tube			
a) The fields of view of two eyes do not coincide.	The interpupillary distance is not correct.	Adjust it correctly.	23
	The diopter difference is not corrected properly.	Adjust it correctly.	23
	The different eyepiece is used for right and left eyes.	Replace the eyepiece and use the same eyepiece for both eyes.	-
	The user is not used to the parallel optical axis.	Do not look at the image immediately after looking into the eyepiece, but look at the whole field of view. (Or release your eyes from eyepieces and look far once, and then look into the eyepieces.)	-
	The positioning pin of the eyepiece is not in the groove of the sleeve.	Insert it properly.	46
5. Stage			
a) When you touch the stage with hand, the image moves significantly.	The stage is not secured properly.	Secure the stage firmly.	72
6. Revolving nosepiece			
a) The rotation tension of the revolving nosepiece it tight or it rattles.	The rotation part of the coded revolving nosepiece interferes with the cable holder.	Rotate the cable holder so that the cable holder does not interfere with the rotation part of the coded revolving nosepiece.	-

Meaning of notations in the following tables

Indicates the lighting state of the indicator of the control box (BX3M-CBFM).

● : Turns ON. ☀ : Blinks. ○ :Turns OFF. ○ : Varies depending on state.

Problem	Cause	Remedy	Page
7. Control box (BX3M-CBFM) and hand switch (BX3M-HS)			
a) Even though the objective is changed by rotating the revolving nosepiece, the OB indicator of the hand switch does not turn ON.			
PWR RMT ERR ○ ○ ○ 1 2 3 4 5 ○ ○ ○ ○ ○	The power of the control box (BX3M-CBFM) is OFF.	Set the main switch to O (OFF) and connect the control box to the AC adapter of the control box again. Then, set the main switch to I (ON) .	38, 76
PWR RMT ERR ● ○ ○ 1 2 3 4 5 ○ ○ ○ ○ ○	The hand switch (BX3M-HS) is not connected.	Set the main switch to O (OFF) and connect the hand switch (BX3M-HS).	38, 76
	The hand switch (BX3M-HS) is damaged.	Contact EVIDENT.	-
PWR RMT ERR ● ○ ○ 1 2 3 4 5 ○ ○ ● ○ ○	The cable of the revolving nosepiece or GX-IFRES is not connected.	Set the main switch to O (OFF) and connect the cable of the revolving nosepiece or GX-IFRES.	38, 68, 74
PWR RMT ERR ● ○ ○ 1 2 3 4 5 ● ○ ● ○ ○	The objective is not correctly engaged in the light path.	Set it to the click position properly.	20
For troubleshooting of the control box (BX3M-CBFM) not described in the above table, refer to the instruction manual for the control box (BX3M-CBFM)			

Repair request

If you cannot solve the problems even though taking actions described in Troubleshooting, please contact EVIDENT for assistance. At that time, please tell them the following information as well.

- Product name and abbreviation (Example: Stage GX-SVR)
- Product number
- Problem

8 Specifications

Configuration units		Product name	Specifications
Microscope frame		GX53F	Focusing unit: Coarse/fine focusing coaxial knob: Stroke 9 mm (2 mm above and 7 mm below the stage surface) Fine focusing knob: Movement distance per rotation 100 μm (One scale: 1 μm) Coarse focusing knob: Movement distance per rotation 7 mm Equipped with tension adjustment mechanism and upper limit stopper mechanism Rating: AC adapter: Input: 100-240V ∿ 50-60Hz 0.4A Output: 5V ⎓ 2.5A Microscope frame: Input: 5V / 2.5A ⎓ Dimension: Approx. 509(W) x 843(D) x 507(H) mm ‹ Combination examples › Observation tube U-BI90 Lamp housing BX3M-LEDR Revolving nosepiece U-D6BDRES-S Stage GX-SVR Wafer holder GX-CP
Observation tube	Binocular tube	U-BI90	Field number 22
		U-BI90CT	Field number 22
		U-TBI90	Field number 22, tilting type
	Trinocular tube	U-TR30H-2	Field number 22
Light source for reflected light illumination	LED lamp housing	BX3M-LEDR	White LED: Maximum current: 700 mA Average lifetime: Approx. 60,000 hours (designed value in normal operation) Power supply: Built-in the microscope frame
	Halogen lamp housing	U-LH100L-3	Applicable bulb: 12V100WHAL-L (long life type made by PHILIPS Co. 7724I) Lifetime: Approx. 2,000 hours (Used in accordance with rating) 12V100WHAL (high light intensity type made by PHILIPS Co. 7023) Lifetime: Approx. 100 hours (Used in accordance with rating) Bulb voltage adjustment range: DC 1.0 V to 12.0 V (Changeable continuously) Power supply: TH4-100, TH4-200
	Mercury lamp housing	U-LH100HGARO U-LH100HG	Applicable burner: USH-103OL (made by Ushio Inc.) Lifetime: Approx. 300 hours (Used in accordance with rating) Power supply: U-RFL-T
	Light source for light guide illumination	U-LGPS	Light guide: U-LLG150, U-LLG300 Light guide adapter: U-LLGAD
Light source for transmitted light illumination	LED lamp housing	BX3M-LEDT	White LED; Maximum current: 700mA Average lifetime: Approx. 60,000 hours (designed value in normal operation) Power supply: BX3M-PSLED
	Halogen lamp housing	U-LH100L-3	Applicable bulb: 12V100WHAL-L(long life type made by PHILIPS Co. 7724I) Lifetime: Approx. 2,000 hours (Used in accordance with rating) 12V100WHAL (high light intensity type made by PHILIPS Co. 7023) Lifetime: Approx. 100 hours (Used in accordance with rating) Bulb voltage adjustment range: DC 1.0 V to 12.0 V (Changeable continuously) Power supply: TH4-100, TH4-200

Configuration units		Product name	Specifications		
Revolving nosepiece	Manual type	U-5RE-2	5 holes		
		U-P4RE	Centering type		
		U-D6RE	6 holes, for DIC observation		
		U-D6RE-ESD-2	6 holes, for DIC observation, support ESD		
		U-P6RE	6 holes, centering type		
		U-D7RE	7 holes, for DIC observation		
		U-5BDRE	5 holes, for brightfield/darkfield observations		
		U-D5BDRE	5 holes, for brightfield/darkfield and DIC observations		
		U-P5BDRE	5 holes, for darkfield observation, centering type		
		U-D6BDRE	6 holes, for darkfield and DIC observations		
	Manual type (Coded type)	U-D6RES	5 holes, coded type, for brightfield observation		
		U-5RES-ESD	6 holes, coded type, for DIC observation		
		U-D7RES	7 holes, coded type, for DIC observation		
		U-D5BDRES-ESD	5 holes, coded type, for brightfield/darkfield and DIC observations, detachable slider		
		U-D6BDRES-S	6 holes, coded type, for brightfield/darkfield and DIC observations		
Slider	For differential interference contrast	U-DICR	Standard type		
		U-DICRHC	High resolution type		
		U-DICRHC	High contrast type		
	For MIX	U-MIXR	Equipped with LED ring illumination, light control by hand switch		
Stage		GX-SFR	Coaxial flexible knob at lower right	Maximum loadable weight: 1 kg	Movable range: 50(Y) x 50(X) mm
		IX2-SFR	Flexible knob at lower right		
		IX-SVL-2	Cross stage L		Movable range: 43(Y) x 50(X) mm
		GX-SVR	Coaxial knob on front bottom right	Maximum loadable weight: 5 kg	Movable range: 50(Y) x 50(X) mm
		IX2-GS	Gliding stage	Maximum loadable weight: 1 kg	

Operating environment

- Indoor use
- Altitude: Max. 2000 meters
- Ambient temperature: 5 to 40 °C (41 to 104 °F)
- Maximum relative humidity: 80% for temperatures up to 31 °C (88 °F) (without condensation)

  In case of over 31 °C (88 °F), the relative humidity is decreased linearly through 70% at 34 °C (93 °F), 60% at 37 °C (99 °F), and to 50% at 40 °C (104 °F).
- Supply voltage fluctuation: ±10 %
- Pollution degree: 2 (in accordance with IEC60664-1)
- Installation/Overvoltage category: II (in accordance with IEC60664-1)

9 Optical performance list «UIS2 series»

The following table shows the combined optical performance of the eyepiece and the objective. The picture on the right shows the various performances indicated on the objectives.

NOTE **This list summarizes the devices combinable with this microscope.**
For devices not described in this table, refer to the latest catalogs or contact EVIDENT.

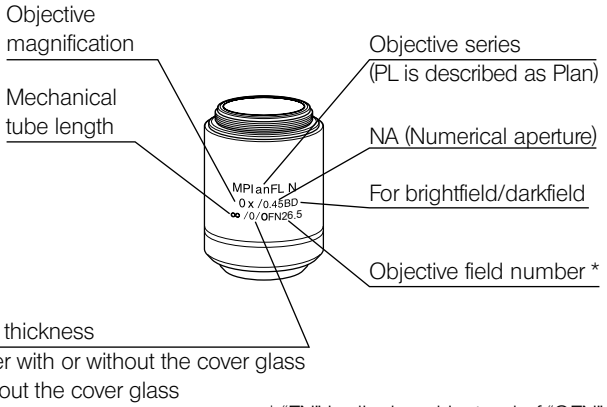

* "FN" is displayed instead of "OFN" depending on the objective.

Observation method by objective

Series name	Magnification	Brightfield	Darkfield	BF/DF simultaneously	Polarization	DIC
MPLN M Plan Achromat	5X/10X/20X/50X/100X	●				
MPLN-BD M Plan Achromat BD	5X/10X/20X/50X/100X	●	●	●		
MPLFLN M Plan Semi Apochromat	1.25X*1/2.5X/*15X/10X/20X/40X*2/50X/100X	●			●	●
MPLFLN-BD M Plan Semi Apochromat BD	5X/10X/20X/50X/100X/150X	●	●	●	●	●
MPLFLN-BDP M Plan Semi Apochromat BDP	5X/10X/20X/50X/100X	●	●	●	●	●
LMPLFLN Long working distance M Plan Semi Apochromat	5X/10X/20X/50X/100X	●			●	●
LMPLFLN-BD Long working distance M Plan Semi Apochromat BD	5X/10X/20X/50X/100X	●	●	●	●	●
SLMPLN Super long working distance M Plan Achromat	20X/50X/100X	●				
MPLAPON M Plan Apochromat	50X/100X	●			●	●
LCPLFLN-LCD Long working distance M Plan Achromat	20X/50X/100X	●				●

*1 For reflected light brightfield observation

*2 Not available for reflected light DIC observation.

Basic information by objective

Series name / Optical performance / Notation		Magnification	Numerical aperture	Working distance (mm)	Cover glass thickness (mm)	Eyepiece: WHN10X (FN22) Total magnification	Eyepiece: WHN10X (FN22) Actual field of view (mm)	Eyepiece: SWH10X (FN26.5) Total magnification	Eyepiece: SWH10X (FN26.5) Actual field of view (mm)
UIS2 series									
MPLN M Plan Achromat (OFN22) *	MPlanN	5X	0.10	20.0	–	50X	4.4	–	–
		10X	0.25	10.6	–	100X	2.2		
		20X	0.40	1.3	0	200X	1.1		
		50X	0.75	0.38	0	500X	0.44		
		100X	0.90	0.21	0	1000X	0.22		
MPLN-BD M Plan Achromat BD (OFN22) *	MPlanN-BD	5X	0.10	12.0	–	50X	4.4	–	–
		10X	0.25	6.5	–	100X	2.2		
		20X	0.40	1.3	0	200X	1.1		
		50X	0.75	0.38	0	500X	0.44		
		100X	0.90	0.21	0	1000X	0.22		
MPLFLN M Plan Semi Apochromat (OFN26.5) * OFN22 only for 1.25X	MPlanFLN	1.25X	0.04	3.5	–	12.5X	17.6	–	–
		2.5X	0.08	10.7	–	25X	8.8	25X	10.6
		5X	0.15	20.0	–	50X	4.4	50X	5.3
		10X	0.30	11.0	–	100X	2.2	100X	2.65
		20X	0.45	3.1	0	200X	1.1	200X	1.33
		40Φ	0.75	0.63	0	400Φ	0.55	400Φ	0.67
		50X	0.80	1.0	0	500X	0.44	500X	0.53
		100X	0.90	1.0	0	1000X	0.22	1000X	0.27
MPLFLN-BD M Plan Semi Apochromat BD (OFN26.5) *	MPlanFLN-BD	5X	0.15	12.0	–	50X	4.4	50X	5.3
		10X	0.30	6.5	–	100X	2.2	100X	2.65
		20X	0.45	3.0	0	200X	1.1	200X	1.33
		50X	0.80	1.0	0	500X	0.44	500X	0.53
		100X	0.90	1.0	0	1000X	0.22	1000X	0.27
		150X	0.90	1.0	0	1500X	0.15	1500X	0.18
MPLFLN-BDP M Plan Semi Apochromat BDP (OFN26.5) *	MPlanFLN-BDP	5X	0.15	12.0	–	50X	4.4	50X	5.3
		10X	0.25	6.5	–	100X	2.2	100X	2.65
		20X	0.40	3.0	0	200X	1.1	200X	1.33
		50X	0.75	1.0	0	500X	0.44	500X	0.53
		100X	0.90	1.0	0	1000X	0.22	1000X	0.27
LMPLFLN Long working distance M Plan Semi Apochromat (OFN26.5) *	LMPlanFLN	5X	0.13	22.5	–	50X	4.4	50X	5.3
		10X	0.25	21.0	–	100X	2.2	100X	2.65
		20X	0.40	12.0	0	200X	1.1	200X	1.33
		50X	0.50	10.6	0	500X	0.44	500X	0.53
		100X	0.80	3.4	0	1000X	0.22	1000X	0.27
LMPLFLN-BD Long working distance M Plan Semi Apochromat BD (OFN26.5) *	LMPlanFLN-BD	5X	0.13	15.0	–	50X	4.4	50X	5.3
		10X	0.25	10.0	–	100X	2.2	100X	2.65
		20X	0.40	12.0	0	200X	1.1	200X	1.33
		50X	0.50	10.6	0	500X	0.44	500X	0.53
		100X	0.80	3.3	0	1000X	0.22	1000X	0.27
SLMPLN Super long working distance M Plan Achromat (OFN26.5) *	SLMPlanN	20X	0.25	25.0	0	200X	1.1	200X	1.33
		50X	0.35	18.0	0	500X	0.44	500X	0.53
		100X	0.60	7.5	0	1000X	0.22	1000X	0.27

Series name / Notation \ Optical performance		Magnification	Numerical aperture	Working distance (mm)	Cover glass thickness (mm)	Eyepiece			
						WHN10X (FN22)		SWH10X (FN26.5)	
						Total magnification	Actual field of view (mm)	Total magnification	Actual field of view (mm)
UIS2 series									
MPLAPON M Plan Apochromat (OFN26.5) *	MPlanApoN	50X	0.95	0.35	0	500X	0.44	500X	0.53
		100X	0.95	0.35	0	1000X	0.22	1000X	0.27
LCPLFLN-LCD Long working distance M Plan Achromat (OFN26.5) *	LCPlanFLN-LCD	20XLCD	0.45	7.4-8.3	0-1.2	200X	1.1	200X	1.33
		50XLCD	0.7	2.2-3	0-1.2	500X	0.44	500X	0.53
		100XLCD	0.85	0.9-1.2	0-0.7	1000X	0.22	1000X	0.27

Abbreviations used for objective

Ex) M PL (Plan) FL N 100 BD

- BD
  - None: For brightfield
  - BD: For brightfield/darkfield
  - BDP: For brightfield/darkfield, polarization
  - IR: For IR
- 100
  - Number: Objective magnification
- N
  - None: UIS objective
  - N: UIS2 objective
- FL
  - None: Achromat: Corrects the aberration by 2 wavelengths (blue and red).
  - FL: Semi-apochromat: Corrects the color aberration in the visible range (from blue-violet to red).
  - APO: Apochromat: Corrects the color aberration in the entire visible range (from violet to red).
- PL (Plan)
  - PL Plan: Corrects the image plane curvature around the field.
- M
  - M: For metal (without cover)
  - LM: For long working distance metal
  - SLM: For super long working distance metal
  - LC: For observation through glass

Glossary in optical performance table

Working distance: Distance between the top surface of the sample and the tip of the objective.

Numerical aperture: Important value that determines the performances (resolution, focal depth and brightness) of the objective.
Resolution.....Increases in proportion to the numerical aperture.
Focal depth.....Decreases in proportion to the numerical aperture.
Brightness.....Increases in proportion to the square of the numerical aperture. (comparing with the same magnification)

Resolution: Indicates the limit where the objective can identify two approaching images using the distance between 2 points on the sample surface.

Focal depth: Indicates the sample depth focused at the same time. The depth increases when the aperture diaphragm is narrowed down and decreases when the numerical aperture of the objective becomes larger.

Field number: Indicates the diameter of the image area visible by the eyepiece in mm.

Actual field: Indicates the diameter of the field area on the sample surface in mm.

10 Assembly

10-1 Assembly diagram

The numbers in the following diagram represent the order to attach each unit.
The units shown in the diagram are typical units. For units which are not described below, contact EVIDENT or refer to the latest catalogs.

NOTE **Before assembling the microscope, remove dust and dirt from the mount of each unit and assemble them carefully to prevent from scratches.**

The procedures to assemble the units shown by ■ numbers are described on the next page and after.

TIP
- Assemble the units using the Allen screwdriver (opposite side: 3 mm) and the Allen wrench (opposite side: 4 mm or 3 mm) provided with the microscope frame. Do not use the Allen wrench (Opposite side: 3 mm) for purposes other than attaching the revolving nosepiece.
- For the scale slider GX-SLM, refer to the instruction manuals provided separately.

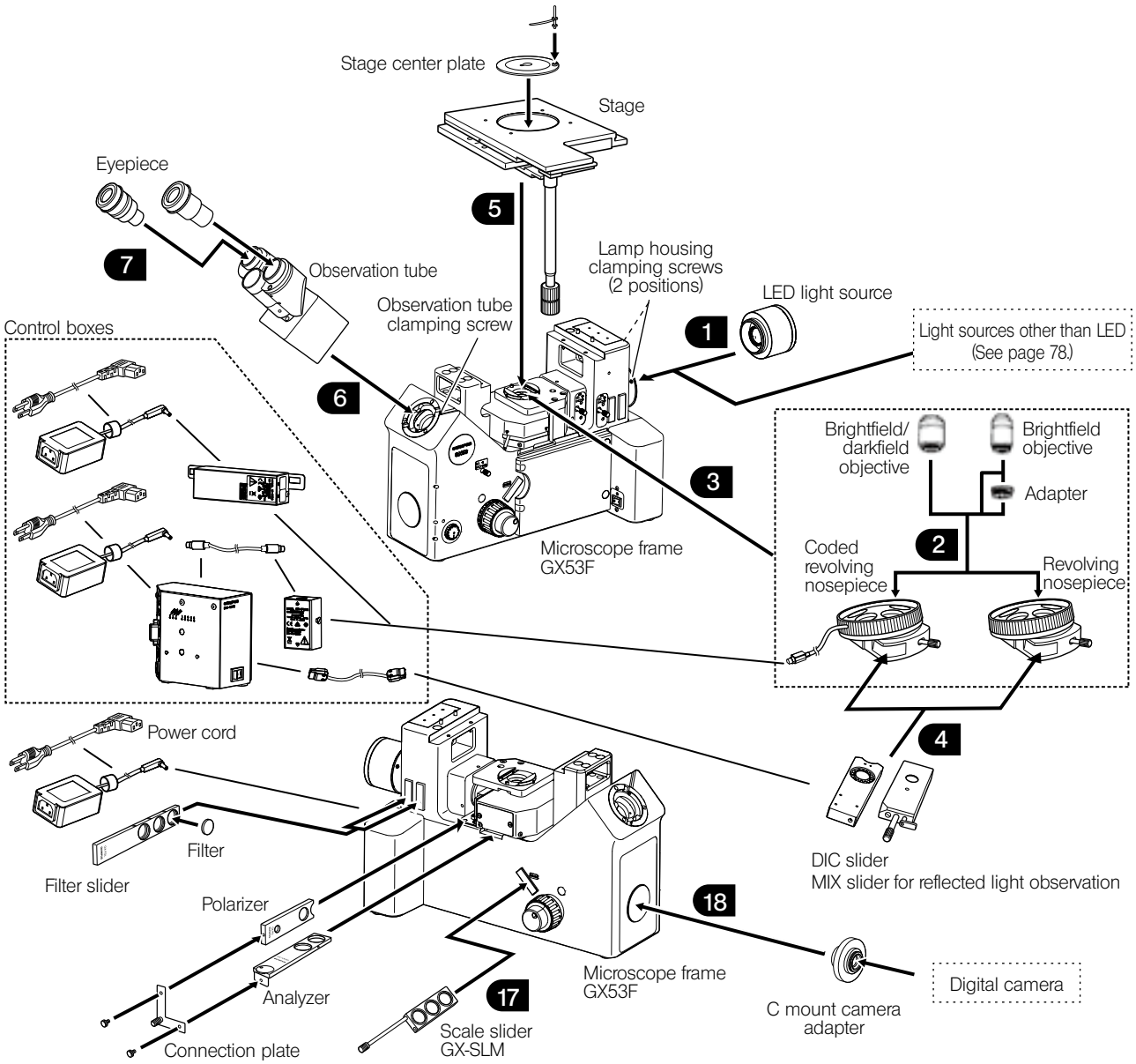

10-2 Assembly procedures

1 Attaching the light source

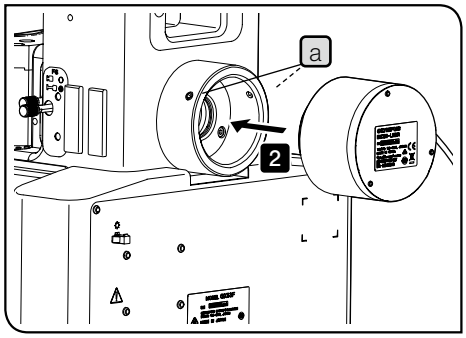

Attaching the LED light source

1. Loosen the clamping screws a (2 positions) of the microscope frame using the Allen screwdriver.

NOTE **Be careful, if the clamping screw is loosened too much, it may come off.**

2. Insert the light source for reflected light illumination into the light source mounting hole until it touches the end.

NOTE **Attach the reflected LED light source so that the cable for the reflected LED light source comes to the right side when looking from the back of the microscope frame.**

3. Tighten the clamping screws a (2 positions) of the microscope frame using the Allen screwdriver.
4. Connect the cable for the reflected LED light source to the connector on the back of the microscope frame. For details, see "Connecting cables" on page 74.

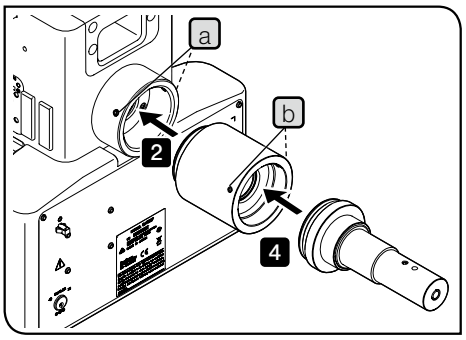

This picture shows the procedure to attach the liquid light guide. The same procedure applies when attaching the mercury lamp housing.

Attaching the liquid light guide or mercury lamp housing

NOTE **In order to attach the liquid light guide or the mercury lamp housing, the optional adapter (MX-HGAD) is required.**

1. Loosen the clamping screws a (2 positions) of the microscope frame using the Allen screwdriver.
2. Insert the adapter (MX-HGAD) into the light source mounting hole of the microscope frame until it touches the end, and tighten the clamping screws a (2 positions).
3. Loosen the clamping screws b (2 positions) of the adapter (MX-HGAD) using the Allen screwdriver.
4. Insert the liquid light guide adapter into the adapter (MX-HGAD) until it touches the end, and tighten the clamping screws b (2 positions).

   For procedures to attach the mercury lamp housing, see "Attaching the mercury lamp housing" on page 52. After the mercury lamp housing is attached, perform the centering of the mercury burner.

Attaching the halogen bulb

For attaching procedures, see "Replacing the halogen bulb" on page 48.

Attaching two lamp housings

NOTE
- The attachable lamp housings or adapters are restricted in combinations, orders and directions. Attach them as shown in the picture below.
- Attach the double lamp housing adapter (U-DULHA) so that the a part shown in the following picture comes to the left side horizontally when facing to the back side of the microscope frame.

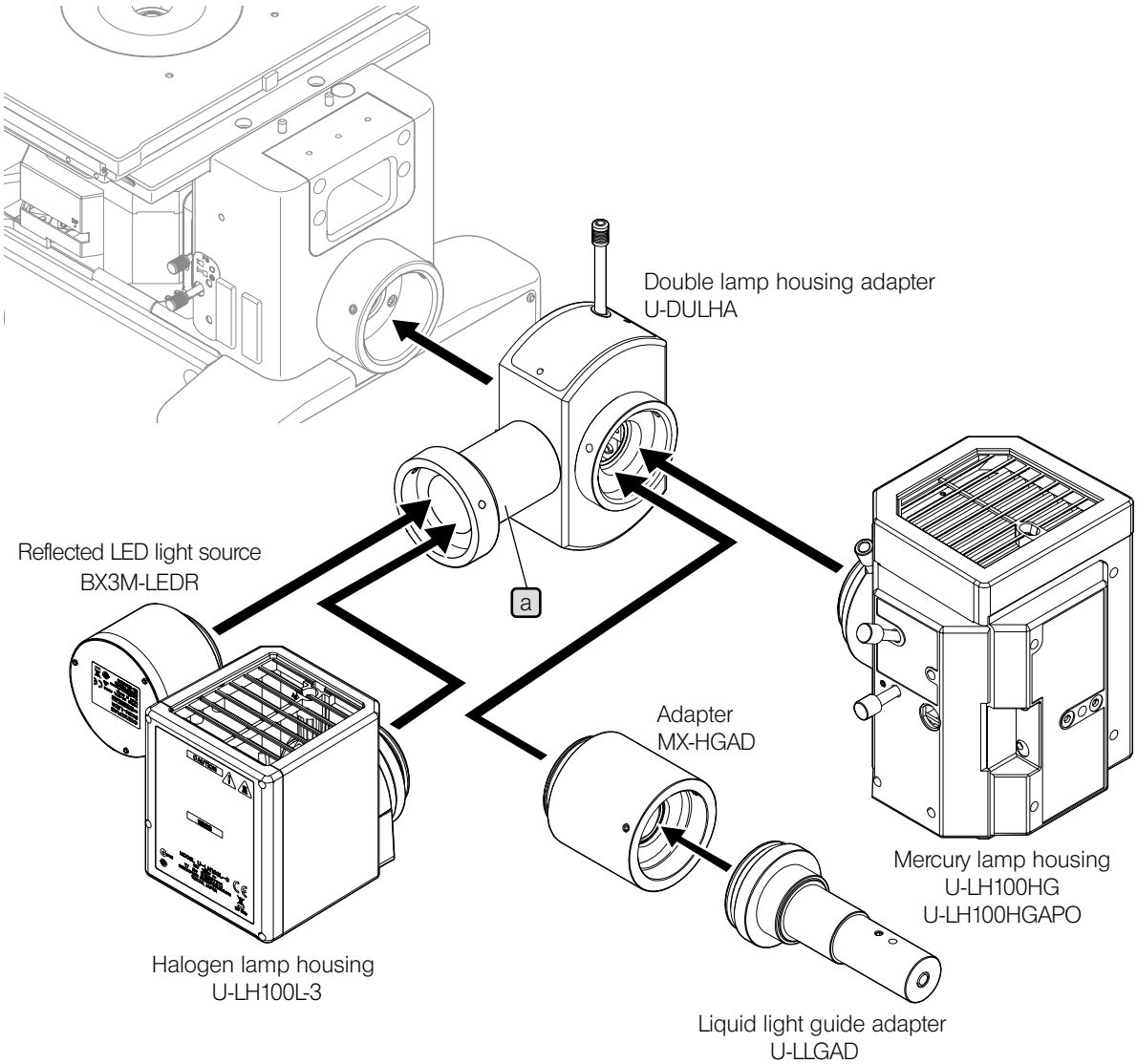

2 Attaching the objective

For attaching procedures, see “6-2 Replacing the objective” on page 47.

3 Attaching the revolving nosepiece

NOTE **Be sure to screw in the cap to the (mounting) hole where the objective is not attached.**

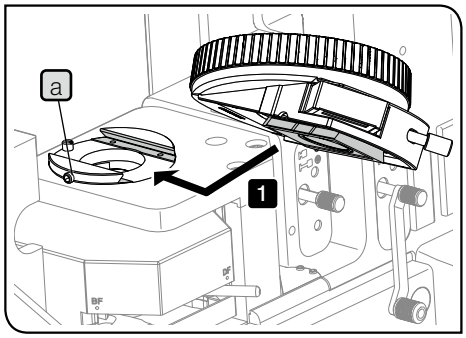

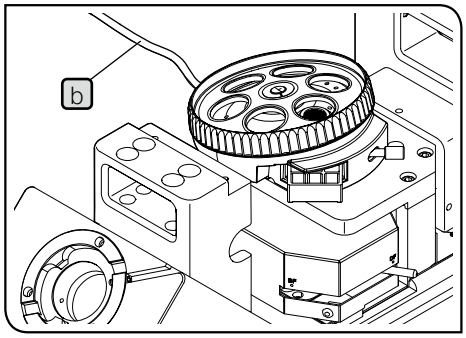

1 Loosen the revolving nosepiece clamping screw a using the Allen wrench (opposite side: 3 mm). Then, align the revolving nosepiece attached with objectives with the mount dovetail from the right side and push it completely. If you attach the coded revolving nosepiece at this time, pull out the cable b for the revolving nosepiece to the left side of the microscope frame.

NOTE
- **Be careful, if the clamping screw is loosened too much, it may come off.**
- **When attaching or detaching the coded revolving nosepiece, be sure to remove the cable from the connector in advance. Also, if cables are fixed by the cable holder, remove the cable from the cable holder in advance.**

2 While pushing the revolving nosepiece in the attaching direction with your right hand, tighten the revolving nosepiece clamping screw a to secure the revolving nosepiece.

3 If you connect the coded revolving nosepiece, connect the cable pulled out to the left side of the microscope frame in **1** to either one of units described below. For details, see “Connecting cables” on page 74.
- Relay unit for coded revolving nosepiece (GX-IFRES)
- Coded function system (U-CBS)

Attaching the relay unit for coded revolving nosepiece (GX-IFRES)

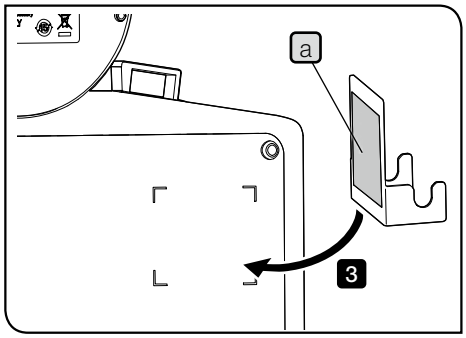

1 Clean the place to attach the relay unit holder on the back of the microscope (shown by dotted line) using the cleaning paper, etc. moistened with absolute alcohol.

2 Remove the protection sticker a of the relay unit holder.

3 Align the adhesive part of the relay unit holder with the position to attach the relay unit holder, and push it to the back of the microscope firmly to attach it.

NOTE
- **Be careful not to cover the label.**
- **If you remove the relay unit holder attached once, the adhesive power becomes weak and the product may drop. Decide the position carefully before attaching it to prevent from attaching again.**

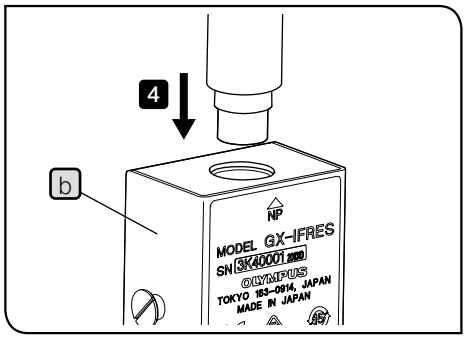

4 Hold GX-IFRES b and connect the connector of the coded revolving nosepiece to the "NP" side of GX-IFRES.

5 Connect the connector of the cable provided with GX-IFRES to the "CB" side of GX-IFRES b.
Connect the other connector of the cable to "NP" of the control box (BX53M-CBFM).

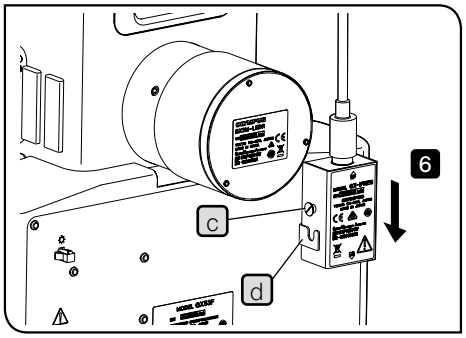

6 Attach the relay unit by hooking the pin c of GX-IFRES in the groove d of the relay unit holder.

NOTE **If the connector is attached or detached while GX-IFRES is hanging on the relay unit holder, the relay unit holder may come off. When attaching or detaching the connector, be sure to hold GX-IFRES with your hand.**

Attaching the coded function system (U-CBS)

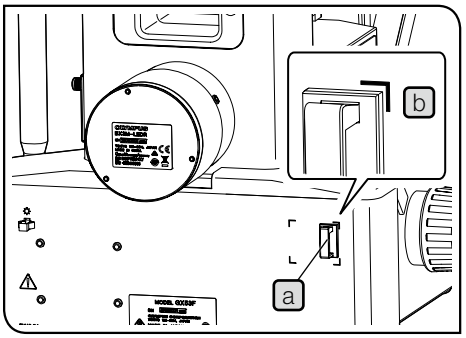

1 Attach the U-CBS holder a by aligning it with the upper right corner of the attaching position b on the back of the microscope.

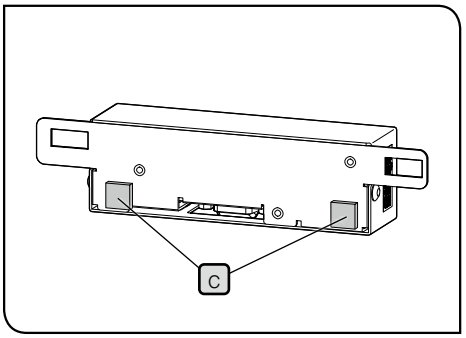

2 Attach the rubber legs c (2 positions) dedicated to U-CBS provided with the microscope frame to the lower back of U-CBS.

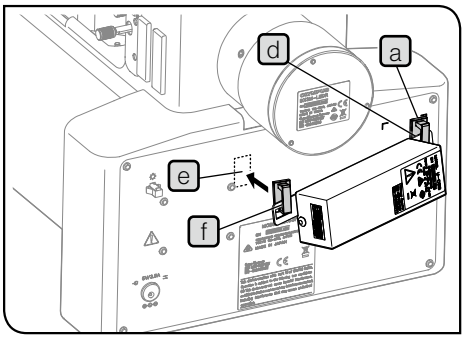

3 Open the U-CBS holder a, put the U-CBS mounting hanger d between the U-CBS holder and close the U-CBS holder a.

4 Attach the U-CBS holder to the other U-CBS mounting hanger e and attach the U-CBS holder f to the back of the microscope.

NOTE **Be careful not to attach the U-CBS over the label on the back of the microscope.**

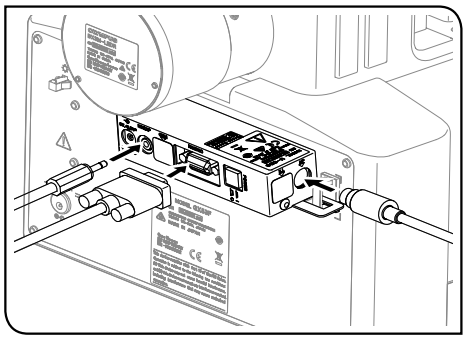

5 Hold U-CBS and connect the connectors of the coded revolving nosepiece, RS-232C interface cable, hand switch for exposure, etc. to U-CBS.

NOTE **If the connector is attached or detached while U-CBS is attached to the U-CBS holder, the U-CBS holder may come off from the microscope. When attaching or detaching the connector, be sure to hold U-CBS with your hand.**

4 Attaching the MIX slider / DIC slider for reflected light observation

For attaching procedures, see “4-7 Using the DIC slider” on page 36 or “4-8 Using the MIX slider for reflected light observation” on page 38.

Attaching the MIX slider for reflected light observation

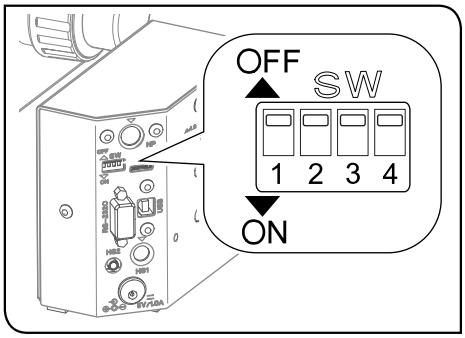

1. Connect the cable for the MIX slider for reflected light observation to the connector of the control box (BX3M-CBFM). For details, see “Connecting cables” on page 74.
2. Set the DIP switch No.4 on the side of the control box (BX3M-CBFM) to ON (Illumination pattern 2).

: Factory default setting

Function/Unit	OFF / ON 1	2	3	4	SettingΦΦ
Buzzer	OFF				The buzzer sound is heard.
	ON				The buzzer sound is not heard.
Motorized nosepiece		OFF			The switches are always kept OFF (factory default setting) due to no combinations with GX53.
		ON			
Hand switch for motorized nosepiece (BX3M-HSRE)			OFF		
			ON		
MIX slider setting				OFF	Illumination pattern 1
				ON	Illumination pattern 2 (for GX53)

5 Attaching the stage

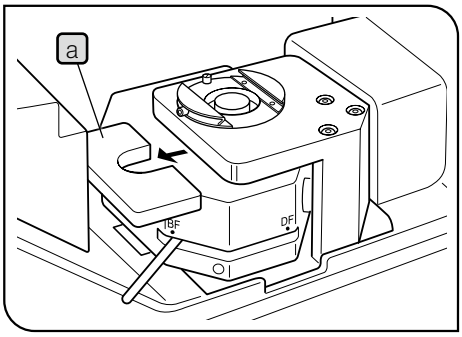

1 The pad a for protecting the focusing unit is attached as factory default. Remove it by rotating the coarse focusing knob toward front side. Note, the tension of the coarse focusing knob is set to tight as factory default. Adjust it to loose (see page 21).

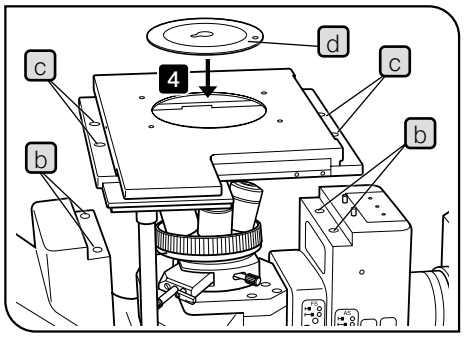

2 Align the clamping screw holes b (4 positions) of the microscope frame with the stage mounting holes c (4 positions), place the stage gently, and push the stage toward the back of the microscope frame.

3 Screw in the hex socket screws provided with the stage using the Allen wrench.

4 Fit the stage center plate d into the stage.

TIP Rotating the stage center plate to make the notch come to the front allows you to check the tip of the objective easily.

Attaching the handle holder GX-SFR

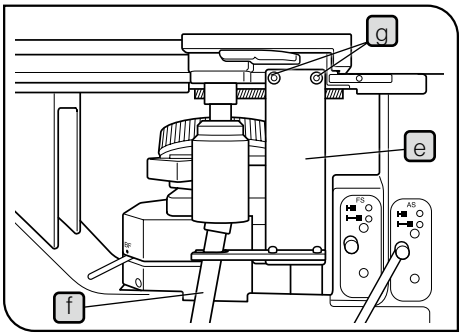

1 Fit the shaft f of the flexible handle into the U-shaped groove of the handle holder e.

2 Secure the handle holder clamping screw g to the stage lightly using the Allen screwdriver.

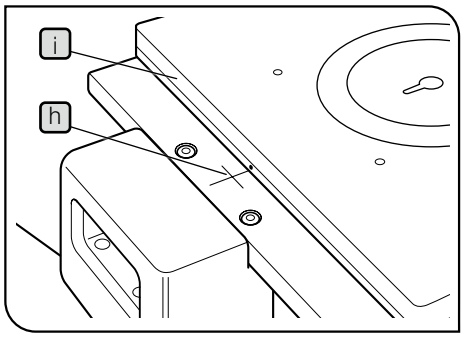

3 Align the stage centering index line h with the end surface i of the upper stage.

4 Move the handle holder to front and back to set it at the position where the X-axis knob and Y-axis knob can be operated most easily.

5 Tighten the clamping screws of the handle holder completely.

6 Attaching the observation tube

If the eyepieces are attached to the observation tube, remove the eyepieces before attaching the observation tube.

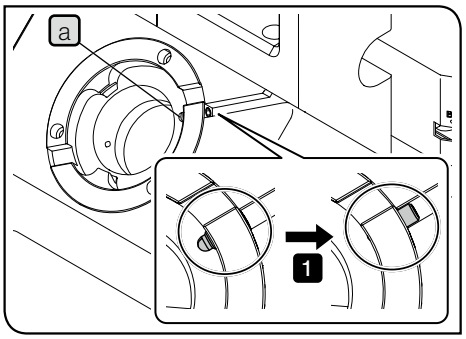

1 Loosen the clamping screw a of the microscope frame until the clamping screw is hidden looking from above (until there is no feeling of protrusion when touched by fingers).

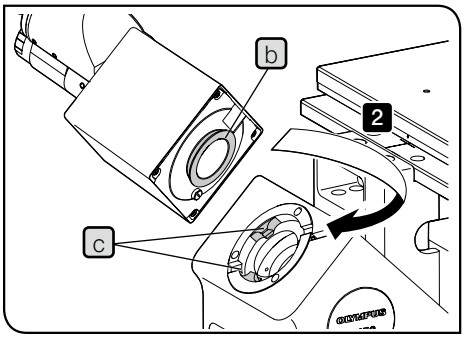

This picture shows the procedure to attach the binocular tube (U-BI90). The same procedure applies when attaching other observation tubes.

2 Insert the circular dovetail b of the observation tube under the protrusions c (2 positions) on the mount of the microscope frame.

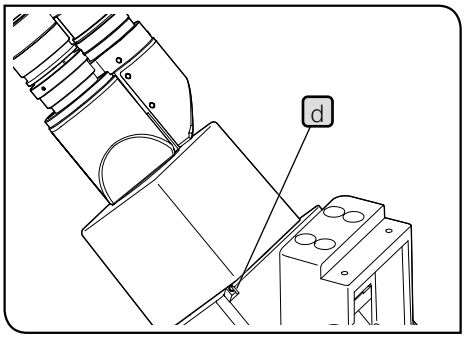

3 Adjust the direction of the observation tube so that the value of the interpupillary distance adjustment scale on the observation tube faces to the front, and tighten the clamping screw d of the standard arm to secure it.

NOTE **If the observation tube moves when you attempt to rotate it, the observation tube is not fixed properly. Tighten the clamping screw again.**

7 Attaching the eyepiece

For attaching procedures, see “6-1 Replacing the eyepiece” on page 45 .

8 Connecting cables

⚠CAUTION Always use the USB cables and RS-232C cable interface cables provided by EVIDENT. If you use the commercially available USB2.0 cables or hubs, the system operations cannot be ensured.

NOTE
- Before connecting or disconnecting cables, set the main switch to O (OFF) and unplug the power cord from the outlet.
- This product contains the motorized parts. For safety purposes, connect the power cord plug last.
- Cables are vulnerable when bent or twisted. Never subject them to excessive force.
- Be sure to connect only cables specified by EVIDENT to the connectors.
  Connect the connectors in the correct orientation paying attention to the shape of the connector.
  If the connector is attached with clamping screws, be sure to tighten them.
- When connecting PC to the control box (BX3M-CBFM), connect only either of the USB cable or the RS-232C cable.

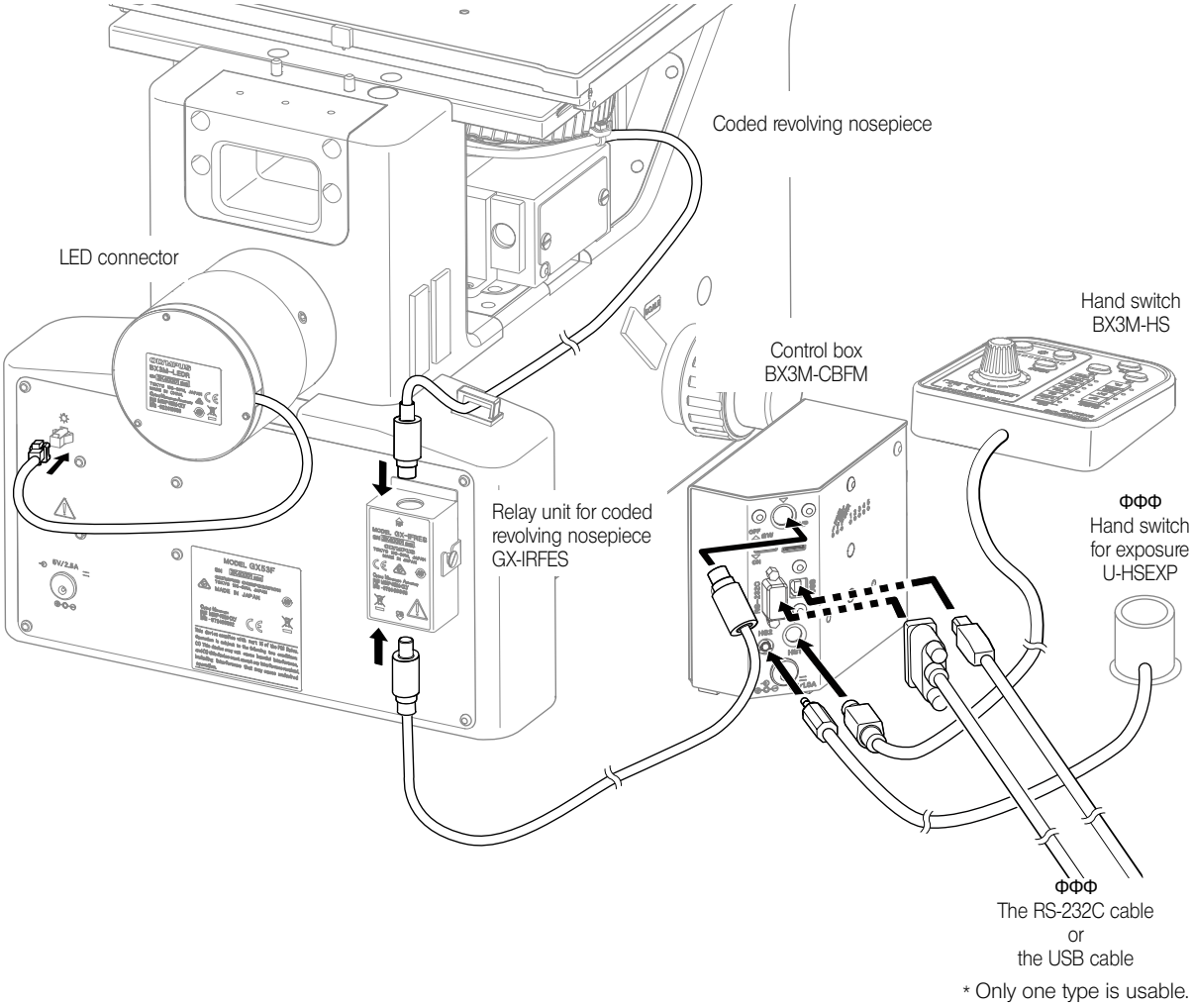

Layout of the cable for MIX slider for reflected light observation

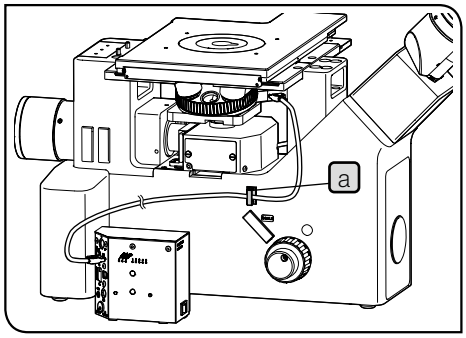

1 Attach the cable holder a on the left side of the microscope.

TIP The cable holders (3 pcs.) are provided with the cable for MIX slider (U-MIXRCBL).

2 Open the cable holder a, put the cable for MIX slider for reflected light observation (U-MIXR) between the cable holder, and close the cable holder.

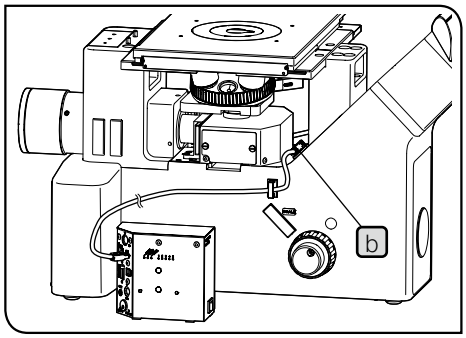

TIP If you disconnect the connector from the MIX slider for reflected light observation, store the cable between the cable holder as shown as b.
When the connector is disconnected, the indicator c of the MIX slider for reflected light observation turns OFF.

Indicator of MIX slider for reflected light observation	
When the connector is connected	Turns ON
When the connector is not connected	Turns OFF

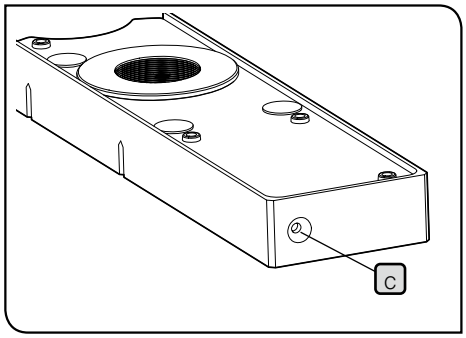

Layout of the cable for coded nosepiece

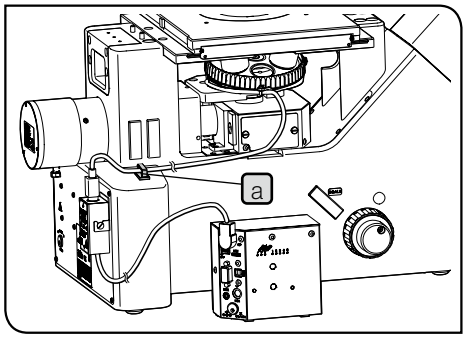

1 Attach the cable holder a on the left side of the microscope.

TIP If you use the coded function system (U-CBS), the cable holder is provided with U-CBS.

2 Open the cable holder a, put the cable for coded nosepiece between the cable holder and close the cable holder.

9 Connecting the AC adapter and power cord

With this system, the AC adapter and the power cord must be connected to up to 2 locations: one location on the microscope frame and one location on the control box (BX3M-CBFM) or the coded function system (U-CBS).

⚠CAUTION

- **Always use the power cord provided by EVIDENT. If the proper power cords are not used, the electric safety and the EMC (Electro-Magnetic Compatibility) performance of the product cannot be assured. If no power cord is provided, please select the proper power cord by referring to the section "Proper selection of the power supply cord" at the end of this instruction manual.**
- **Set the main switch of the microscope frame to ○ (OFF) and connect the power cord.**
- **Connect the power cord plug to the grounded triplex outlet. If the outlet is not grounded, the electric safety performance intended by EVIDENT cannot be assured.**
- **If the power cords contact a hot area of devices such as a lamp housing, etc., they could melt and cause electric shock. Be sure to place the power cords sufficiently apart from the hot area of the device.**

NOTE

- **Cables are vulnerable when bent or twisted. Never subject them to excessive force.**
- **When inserting or removing the AC adapter plug, hold the a and c parts and insert straightly.**

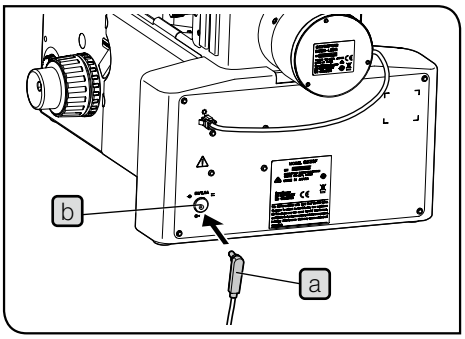

1 Insert the AC adapter's plug a firmly into the AC adapter jack b of the microscope frame, control box (BX3M-CBFM) or the coded function system (U-CBS).

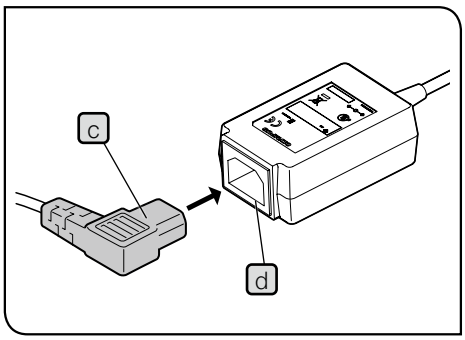

2 Insert the power cord connector c into the connector d of the AC adapter.

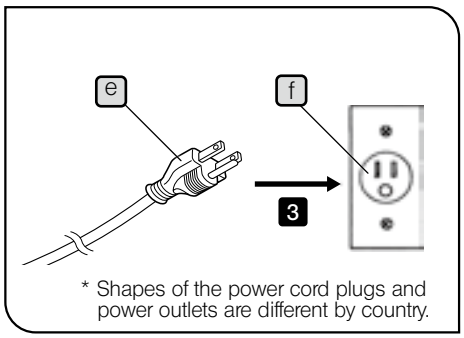

* Shapes of the power cord plugs and power outlets are different by country.

3 Connect the power cord's plug e to the power outlet f on the wall.

10 Attaching the ND filter for darkfield observation

When you observe the image by changing between the brightfield (BF) observation and the darkfield (BF) observation frequently, the ND filter with frame provided with the microscope frame can be attached to BF side in order to reduce the brightness when changed from DF observation to BF observation.

TIP Be sure to use the ND filter with frame and the dedicated screwdriver provided with the microscope frame.

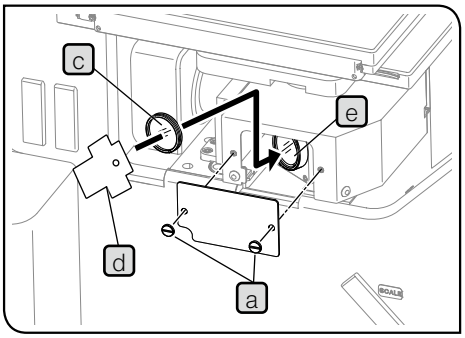

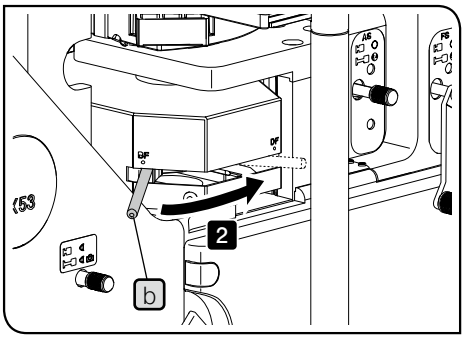

1 Loosen the clamping screws a (2 positions) of the mirror cover using the Allen screwdriver to remove the mirror cover.

2 Set the BF/DF selection lever b to DF side. The BF mirror comes closer to the opening where the cover is removed.

3 Insert the dedicated screwdriver d provided with the microscope frame into the notch on the ND filter with frame c, and attach the ND filter with frame firmly to the mounting thread e of the BF mirror by rotating it clockwise.

4 Attach the mirror cover back to the original position.

11 Attaching the illumination column

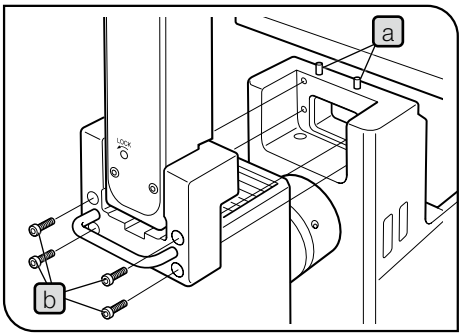

1. Loosen the clamping screws (4 positions) using the Allen wrench provided with the microscope frame to remove the illumination column dummy block attached to the microscope frame.
2. Align the guide holes on the illumination column side with the positioning pins a (2 positions) protruded from the microscope frame, and fit the illumination column from above.
3. Holding the illumination column with your hand, secure the illumination column to the microscope frame with the provided hex socket screws b (4 positions) using the provided Allen wrench.

12 Attaching the halogen bulb for transmitted light observation

For attaching procedures, see “Replacing the halogen bulb” on page 48.

13 Attaching the lamp housing for transmitted light observation

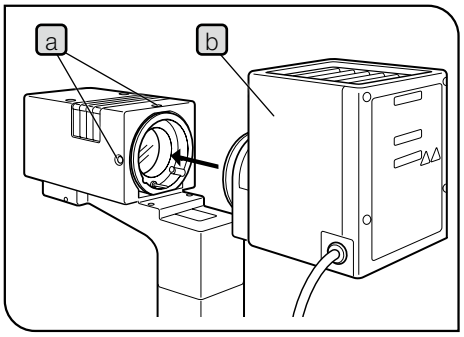

This picture shows the procedure to attach the halogen lamp housing (U-LH100L-3). The same procedure applies when attaching the LED light source for reflected light observation (BX3M-LEDT).

1. Loosen the lamp housing clamping screws a (2 positions) of the illumination column using the Allen screwdriver and insert the lamp housing b.
2. Make sure that the lamp housing is attached correctly without tilting as shown in the picture and tighten the clamping screws a.

14 Setting the filters

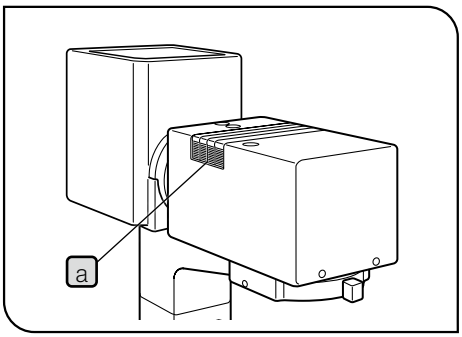

The filters with the diameter of Ø45 mm and thickness of 6 mm or less can be attached.
The attachable filters include the color temperature conversion filter (45-LBD-IF), green interference filter (43IF550-W45) and ND filter, etc. as well as the provided frost filters.

1 Flip up the filter holder by hooking a finger on the finger hook a.

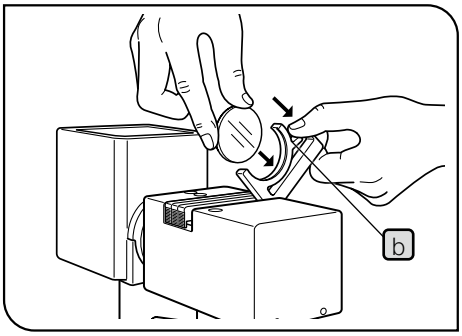

2 While holding the mounting lever b of the filter holder, insert the required filter.

NOTE **Be sure to hold the filter by the outer edge to prevent the glass surfaces from attaching dirt or dust.**

⚠CAUTION **The filter becomes very hot immediately after illumination. Before replacing or adding filters, be sure to set the main switch to ○ (OFF) and wait until the filter holder and filters are cooled down sufficiently.**

3 Return the filter holder to the original position and engage it in the light path.

TIP Always engage the provided frost filter in the light path unless the brightness of the illumination light is particularly required.

15 Attaching the condenser

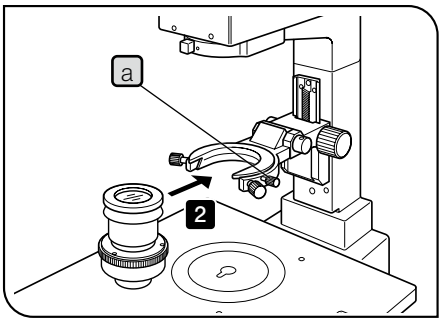

1 Loosen the condenser clamping screw a.

2 Insert the condenser into the mount dovetail of the condenser holder and push it horizontally so that the numerical aperture scale is visible on the front.

3 Tighten the condenser clamping screw a.

16 Adjusting the tension of the condenser height adjustment knob

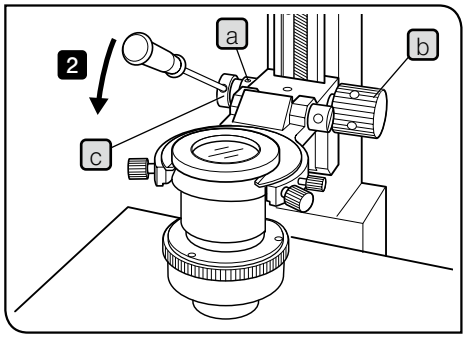

1. Loosen the clamping screws a (2 positions) of the left side knob using the Allen screwdriver. If the condenser height adjustment knob b is attached on the left side, attach it on the right side (as shown in the picture on the left).
2. Insert the Allen screwdriver into the hole c of the condenser height adjustment knob. While holding the knob b, rotate the knob in arrow direction increases the tension and in the opposite direction decreases the tension.
3. When adjustment is completed, tighten the clamping screws a (2 positions) to secure the condenser height adjustment knob.

Changing the knob position

TIP As the condenser height adjustment knob b is detachable, it can also be attached to the other side.
Loosen the knob clamping screws a (2 positions) using the Allen screwdriver and remove the knob and attach it to the other side. Remove the knob if not necessary and keep it in a safe place.

17 Attaching the scale slider

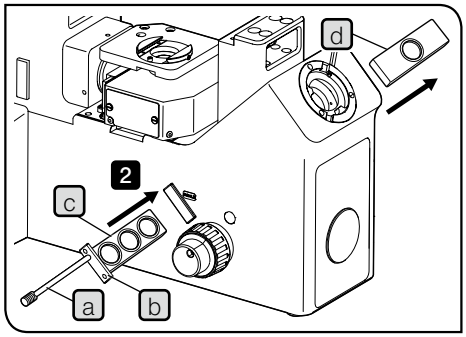

1. Put the slider selection knob a through the holes of the cover plate b and screw it into the screw hole of the scale slider c .
2. Remove the cap from the scale slider insertion hole of the microscope frame and insert the scale slider. When the scale slider is inserted, the dummy slider d built-in the microscope frame will be pushed out.

NOTE **The dummy slider contains the parfocal glass used for correcting the light path length. If you remove the scale slider, be sure to return the dummy slider to the original position.**

3. Use your Philips screwdriver to secure the cover plate to the microscope frame with the screws provided with the cover plate b .

For detail procedures to attach the scale slider (GX-SLM), refer to the instruction manual provided with the unit.

18 Attaching and adjusting the camera adapter

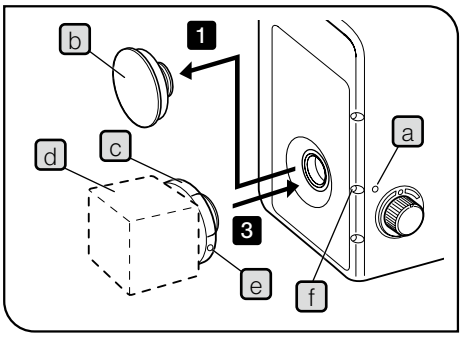

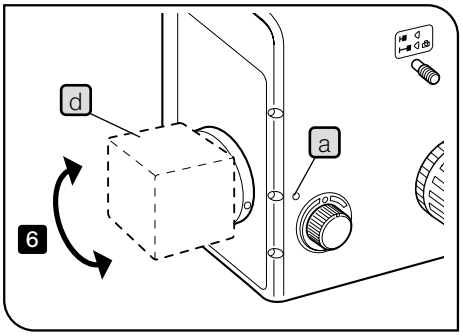

Attaching to the camera port on the front side of the microscope

1. Insert the Allen screwdriver provided with microscope frame into the clamping screw hole a of the camera port on the front side of the microscope, loosen the inside clamping screw, and remove the cap b.
2. Screw the TV camera d into the C-mount of the camera adapter c firmly.
3. Insert the C-mount part so that the parfocality adjustment screw e matches with the adjustment hole f, fit the Allen screwdriver into the clamping screw hole a and tighten the screw to clamp.
4. Insert the Allen screwdriver into the adjustment hole f and loosen the adjustment screw e.
5. Set the main switches of the microscope and TV camera to I (ON) and bring the sample into focus precisely by observing it through the eyepieces.
6. Rotate the TV camera d so that the image on the TV monitor is brought into focus, and then, tighten the adjustment screw e at the position where it is in focus.

TIP If it is required to adjust the orientation of the TV camera, loosen the screw inside the clamping screw hole a, adjust the orientation and tighten the screw.

Attaching to the side port unit or the trinocular tube

For details, refer to the instruction manuals for the camera and the camera adapter.

10-3 Connection with PC

For details, refer to the instruction manual provided with the control box (BX3M-CBFM) or the coded function system (U-CBS).

11 Preventive inspection sheet for illumination devices

- We recommend "Preventive Inspections" periodically (every time you replace lamps and at least once every 6 months).
- The table below identifies the check items to be observed. Put (X) if not applicable or ( ) if applicable.
- If there are any check marks, immediately stop using the product and request inspection to EVIDENT or replace with new illumination device(s).
- If you detect an abnormality other than those listed below or EVIDENT products other than illumination devices, also stop using the product and request inspection to EVIDENT.
- The repair, replacement and inspection that passed the warranty period are paid-services.

If you have any questions, please contact EVIDENT.

	Check results (Date)			
Check items	/	/	/	/
1. More than 8 years have passed since original purchase of the illumination device, or the total using time exceeds 20,000 hours of use.				
2. Light flickers when you move a lamp cable or illumination devices. (only when using the halogen bulb)				
3. Dirt or substances are attached around the main switch.				
4. The light flickers if you move a lamp cable or illumination devices.				
5. Lamp cable is unusually hot to the touch.				
6. Burning or smoke odor.				
7. The light still flickers even though the lamp is replaced. (only when using the halogen bulb)				
8. Signs of deformation, backlash, or looseness, etc. when you assemble/ disassemble the illumination device. (i.e. it is hard to open/close the lid during lamp-replacement.)				
9. Illumination device has become deformed, cracked or tarnished in any way. Or the colors of the right and left are different. (only when using the halogen bulb)				
10. Illumination device/ housing has become deformed, cracked or tarnished in any way.				
11. Lamp cables or wiring parts have become deformed, cracked or tarnished in any way.				
12. Frequent repairs to similar devices put into use at the same time as the unit being checked.				

* If the spaces are not enough for check , copy this sheet.

12 Proper selection of the power supply cord

If no power supply cord is provided, please select the proper power supply cord for the equipment by referring to "Specifications" and "Certified Cord" below:

Caution : In case you use a non-approved power supply cord for EVIDENT products, EVIDENT can no longer warrant the electrical safety of the equipment.

Specifications

Voltage rating	125 V AC (for 100-120 V AC area) or, 250 V AC (for 220-240 V AC area)
Current rating	6 A minimum
Temperature rating	60 ˚C minimum
Length	3.05 m maximum
Fittings configuration	Grounding type attachment plug cap. Opposite terminates in molded-on IEC configuration appliance coupling.

Table 1 Certified cord

A power supply cord should be certified by one of the agencies listed in Table 1 , or comprised of cordage marked with an agency marking per Table 1 or marked per Table 2. The fittings are to be marked with at least one of the agencies listed in Table 1. In case you are unable to buy locally the power supply cord which is approved by one of the agencies mentioned in Table 1, please use replacements approved by any other equivalent and authorized agencies in your country.

Country	Agency	Certification mark	Country	Agency	Certification mark
Argentina	IRAM		Italy	IMQ	
Australia	SAA		Japan	JET	
Austria	ÖVE		Netherlands	KEMA	
Belgium	CEBEC		Norway	NEMKO	
Canada	CSA		Spain	AEE	
Denmark	DEMKO		Sweden	SEMKO	
Finland	FEI		Switzerland	SEV	
France	UTE		United Kingdom	ASTA BSI	
Germany	VDE		U.S.A.	UL	
Ireland	NSAI				

Table 2 HAR flexible cord

Approval organizations and cordage harmonization marking methods

Approval organization	Printed or embossed harmonization marking (May be located on jacket or insulation of internal wiring)		Alternative marking utilizing black-red-yellow thread (Length of color section in mm)		
			Black	Red	Yellow
Comite Electrotechnique Belge (CEBEC)	CEBEC	‹HAR›	10	30	10
Verband Deutscher Elektrotechniker (VDE) e.V. Prüfstelle	‹VDE›	‹HAR›	30	10	10
Union Technique de l´Electricite´ (UTE)	USE	‹HAR›	30	10	30
Instituto Italiano del Marchio di Qualita´ (IMQ)	IEMMEQU	‹HAR›	10	30	50
British Approvals Service for Electric Cables (BASEC)	BASEC	‹HAR›	10	10	30
N.V. KEMA	KEMA-KEUR	‹HAR›	10	30	30
SEMKO AB Svenska Elektriska Materielkontrollanstalter	SEMKO	‹HAR›	10	10	50
Österreichischer Verband für Elektrotechnik (ÖVE)	‹ÖVE›	‹HAR›	30	10	50
Danmarks Elektriske Materialkontroll (DEMKO)	‹DEMKO›	‹HAR›	30	10	30
National Standards Authority of Ireland (NSAI)	‹NSAI›	‹HAR›	30	30	50
Norges Elektriske Materiellkontroll (NEMKO)	NEMKO	‹HAR›	10	10	70
Asociacion Electrotecnica Y Electronica Espanola (AEE)	‹UNED›	‹HAR›	30	10	70
Hellenic Organization for Standardization (ELOT)	ELOT	‹HAR›	30	30	70
Instituto Portages da Qualidade (IPQ)	np	‹HAR›	10	10	90
Schweizerischer Elektro Technischer Verein (SEV)	SEV	‹HAR›	10	30	90
Elektriska Inspektoratet	SETI	‹HAR›	10	30	90

Underwriters Laboratories Inc. (UL)	SV, SVT, SJ or SJT, 3 X 18AWG
Canadian Standards Association (CSA)	SV, SVT, SJ or SJT, 3 X 18AWG

Manufactured by

EVIDENT CORPORATION

6666 Inatomi, Tatsuno-machi, Kamiina-gun, Nagano 399-0495, Japan

Distributed by

EVIDENT EUROPE GmbH

Caffamacherreihe 8-10, 20355 Hamburg, Germany

EVIDENT EUROPE GmbH UK Branch

Part 2nd Floor Part A, Endeavour House, Coopers End Road, Stansted CM24 1AL, U.K.

EVIDENT SCIENTIFIC, INC.

48 Woerd Ave Waltham, MA 02453, U.S.A.

EVIDENT AUSTRALIA PTY LTD

97 Waterloo Road, Macquarie Park, NSW 2113, Australia

Life science solutions

Service Center

https://www.olympus-lifescience.com/support/service/

Official website

https://www.olympus-lifescience.com

Industrial solutions

Service Center

https://www.olympus-ims.com/service-and-support/service-centers/

Official website

https://www.olympus-ims.com

AX9460 04 Issued in September, 2022